ABBREVIATIONS

The following abbreviations are used in this manual.

ABS	=	Anti–Lock Brake System
A/C	=	Air Conditioning
A/T	=	Automatic Transaxle
COMB.	=	Combination
C/P	=	Coupe
ECU	=	Electronic Control Unit
ESA	=	Electronic Spark Advance
EVAP	=	Evaporative Emission
FL	=	Fusible Link
J/B	=	Junction Block
LH	=	Left–Hand
M/T	=	Manual Transaxle
O/D	=	Overdrive
R/B	=	Relay Block
RH	=	Right–Hand
SFI	=	Sequential Maltiport Fuel Injection
SRS	=	Supplemental Restraint System
SW	=	Switch
TEMP.	=	Temperature
VSV	=	Vacuum Switching Valve
w/	=	With
w/o	=	Without

* The titles given inside the components are the names of the terminals (terminal codes) and are not treated as being abbreviations.

G ELECTRICAL WIRING ROUTING

▭ : Location of Connector Joining Wire Harness and Wire Harness
▽ : Location of Ground Points

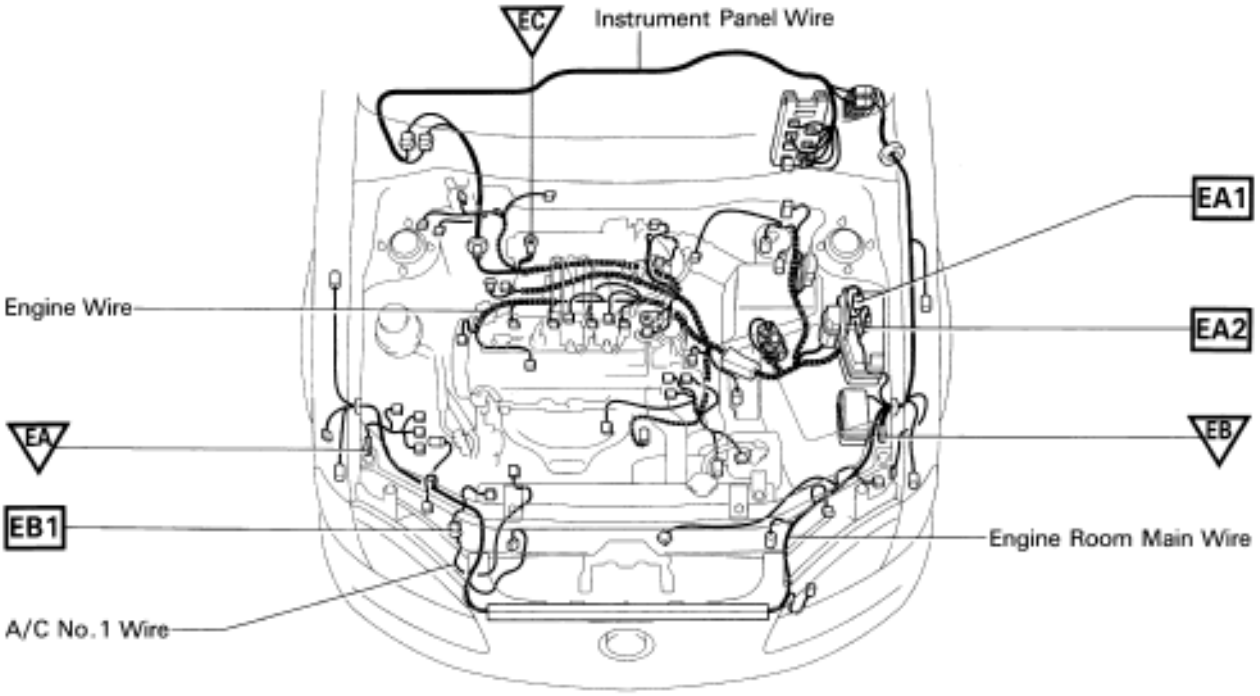

◯ : Location of Splice Points

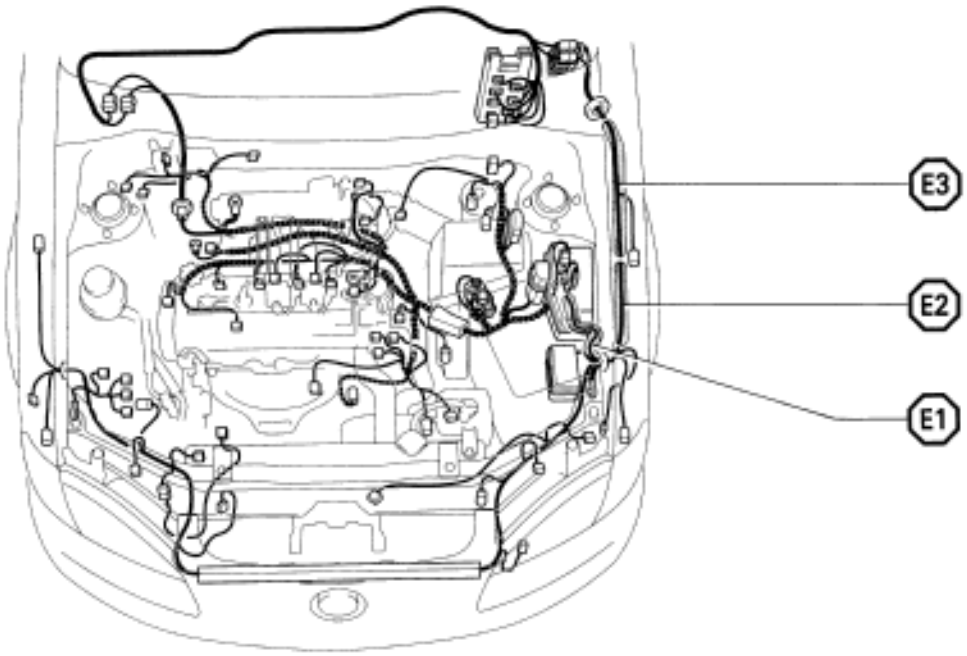

Connector Joining WIre Harness and Wire Harness

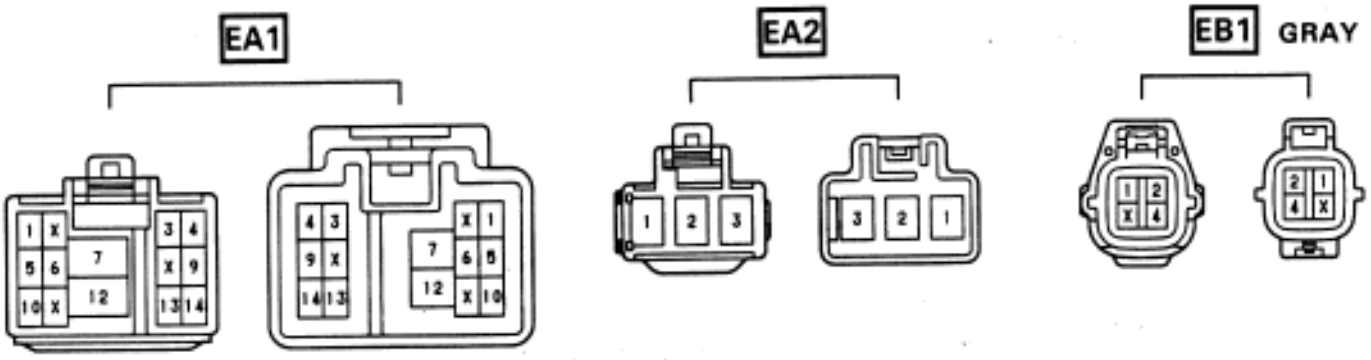

CODE	JOINING WIRE HARNESS AND WIRE HARNESS (CONNECTOR LOCATION)
EA1	ENGINE ROOM MAIN WIRE AND ENGINE ROOM MAIN WIRE (INSIDE OF THE ENGINE ROOM R/B)
EA2	
EB1	A/C NO.1 WIRE AND ENGINE ROOM MAIN WIRE (NEAR THE RADIATOR SUPPORT RH)

: Location of Connector Joining Wire Harness and Wire Harness

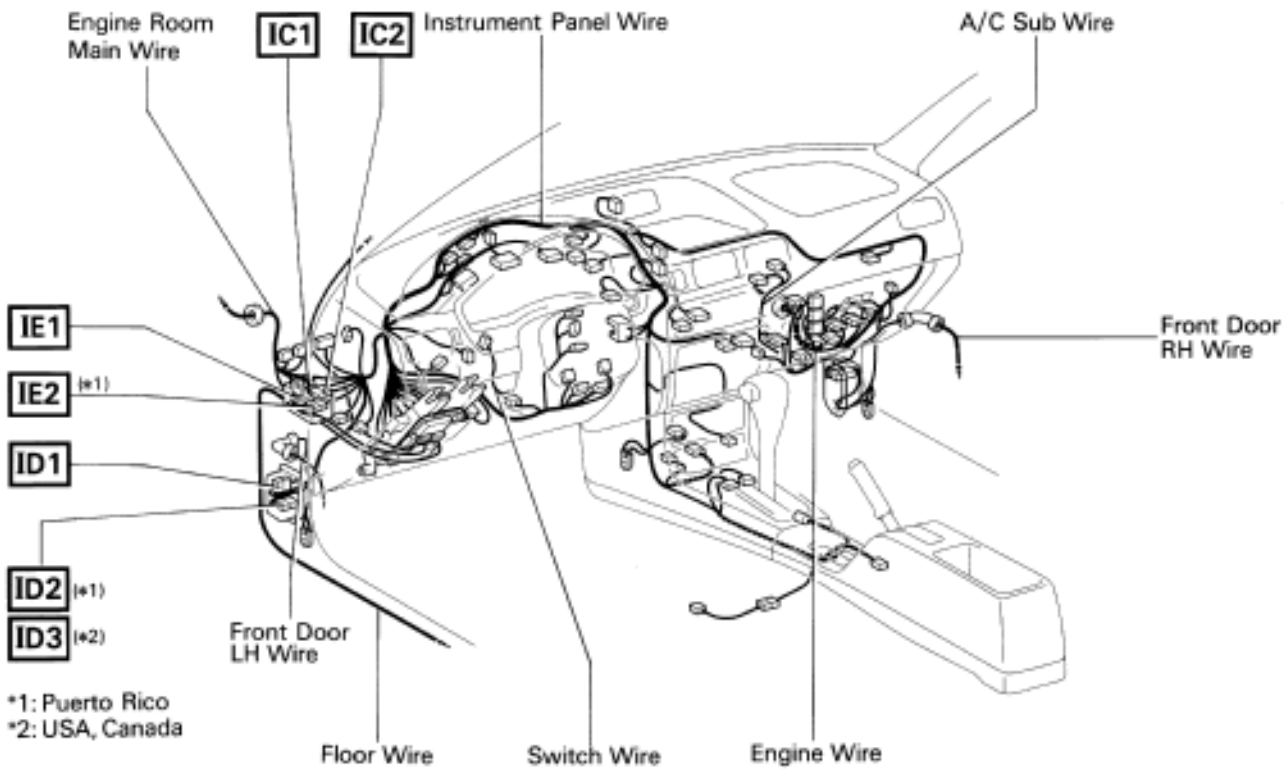

: Location of Ground Points

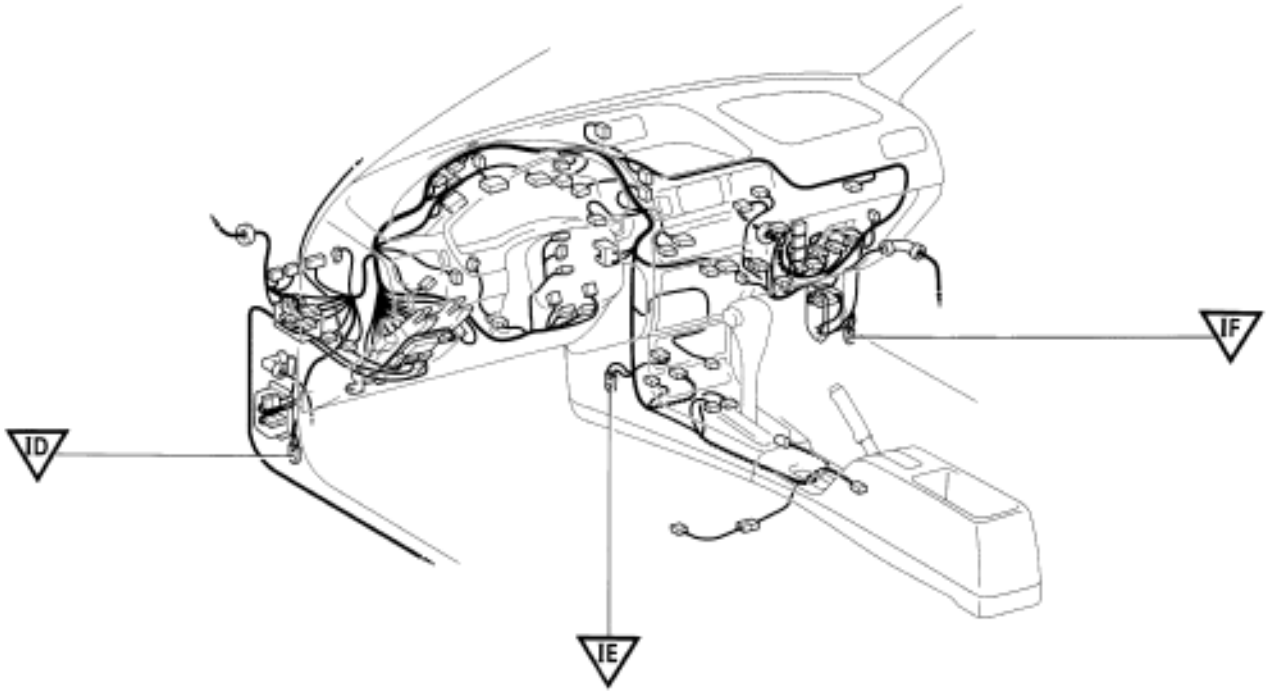

Connector Joining Wire Harness and Wire Harness

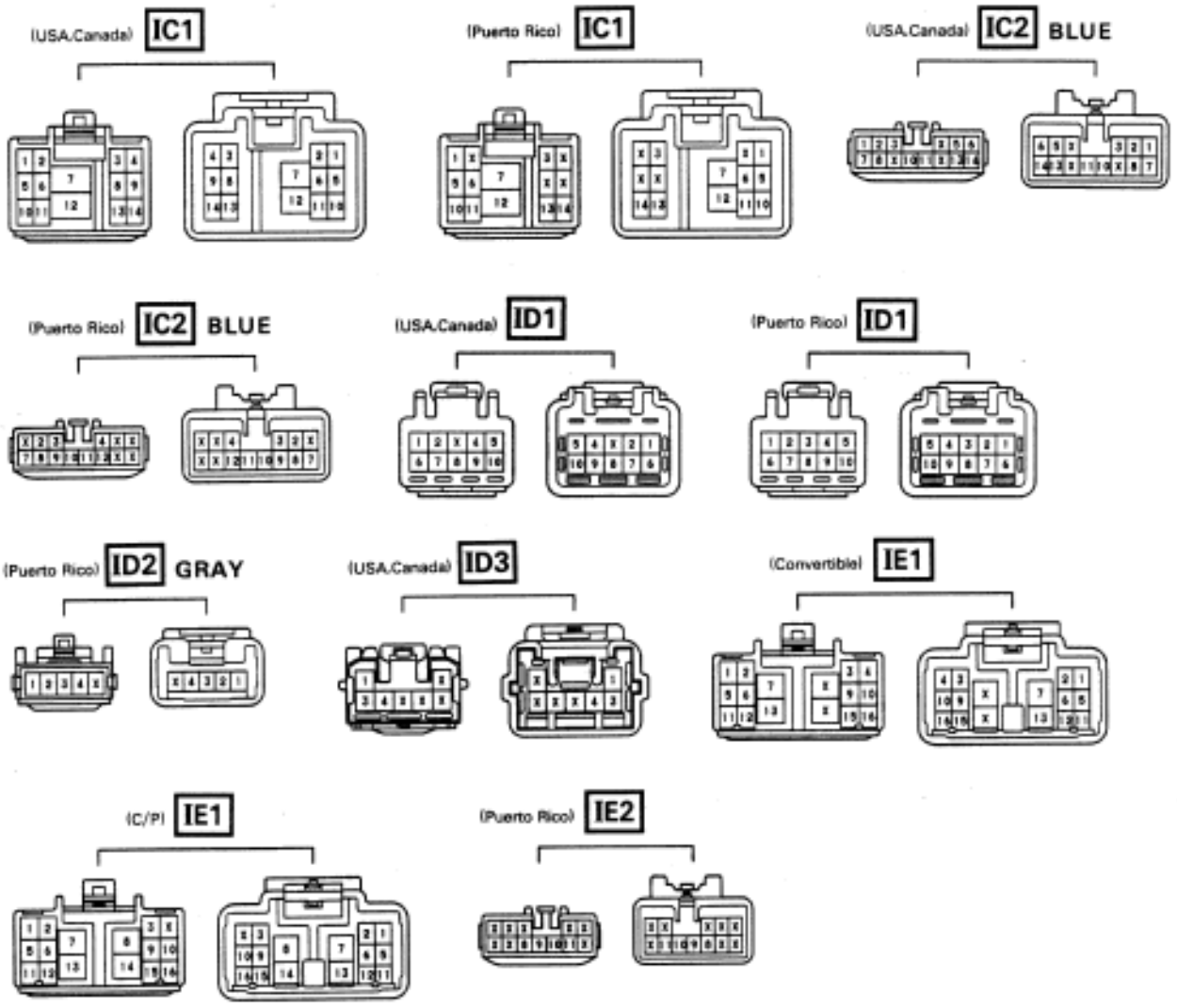

CODE	JOINING WIRE HARNESS AND WIRE HARNESS (CONNECTOR LOCATION)
IC1	INSTRUMENT PANEL WIRE AND ENGINE ROOM MAIN WIRE (LEFT KICK PANEL)
IC2	
ID1	FRONT DOOR LH WIRE AND INSTRUMENT PANEL WIRE (LEFT KICK PANEL)
ID2	
ID3	
IE1	INSTRUMENT PANEL WIRE AND FLOOR WIRE (LEFT KICK PANEL)
IE2	

: Location of Connector Joining Wire Harness and Wire Harness

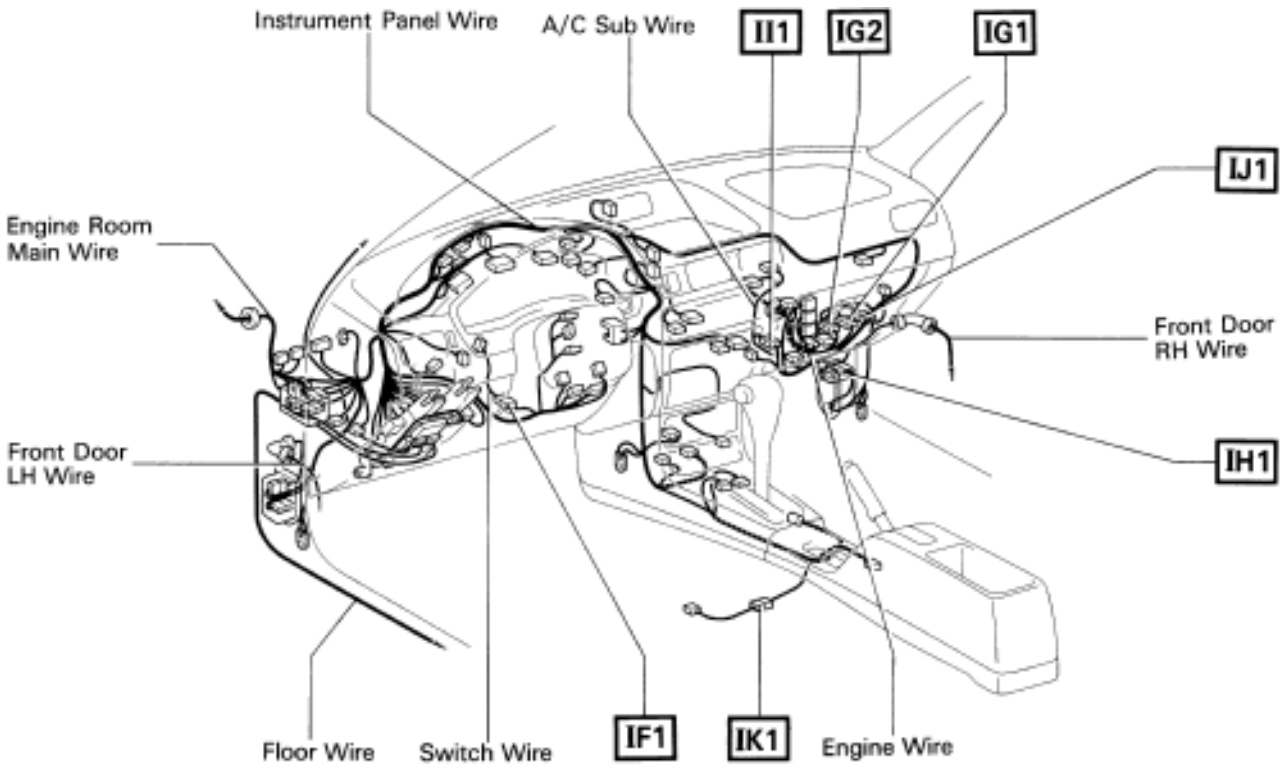

: Location of Splice Points

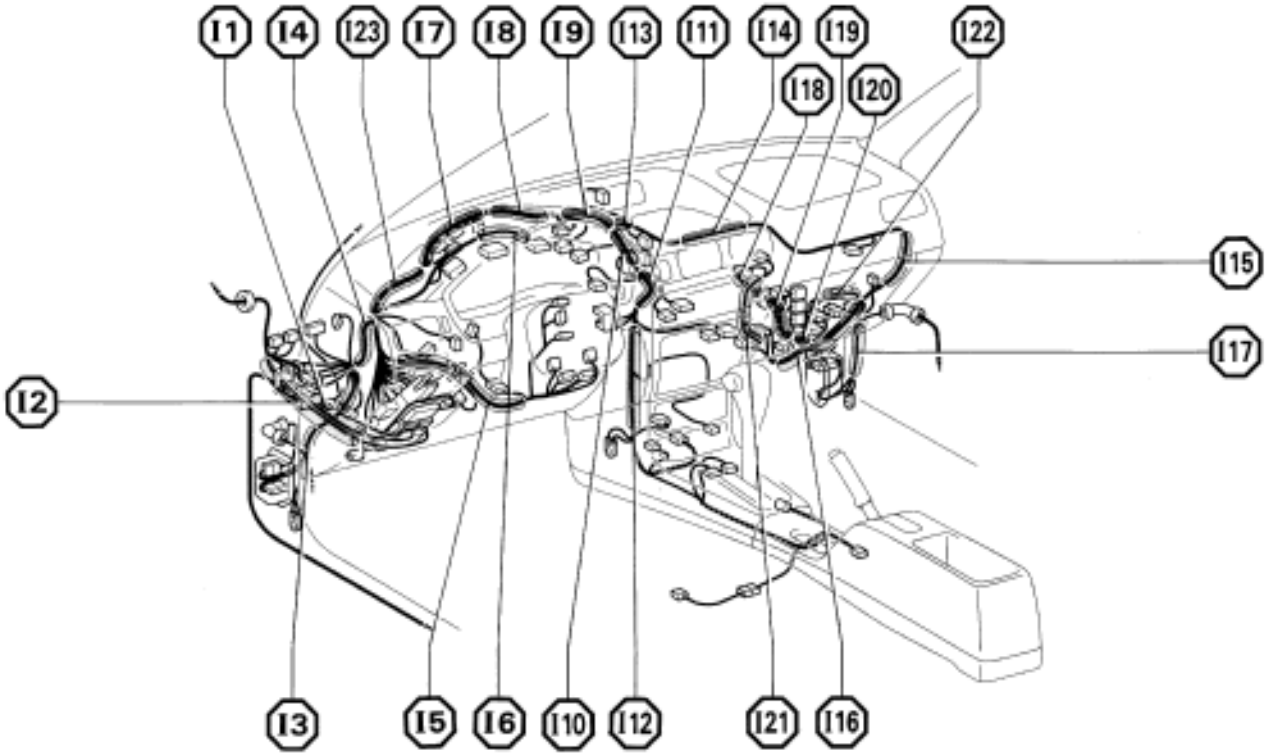

Connector Joining Wire Harness and Wire Harness

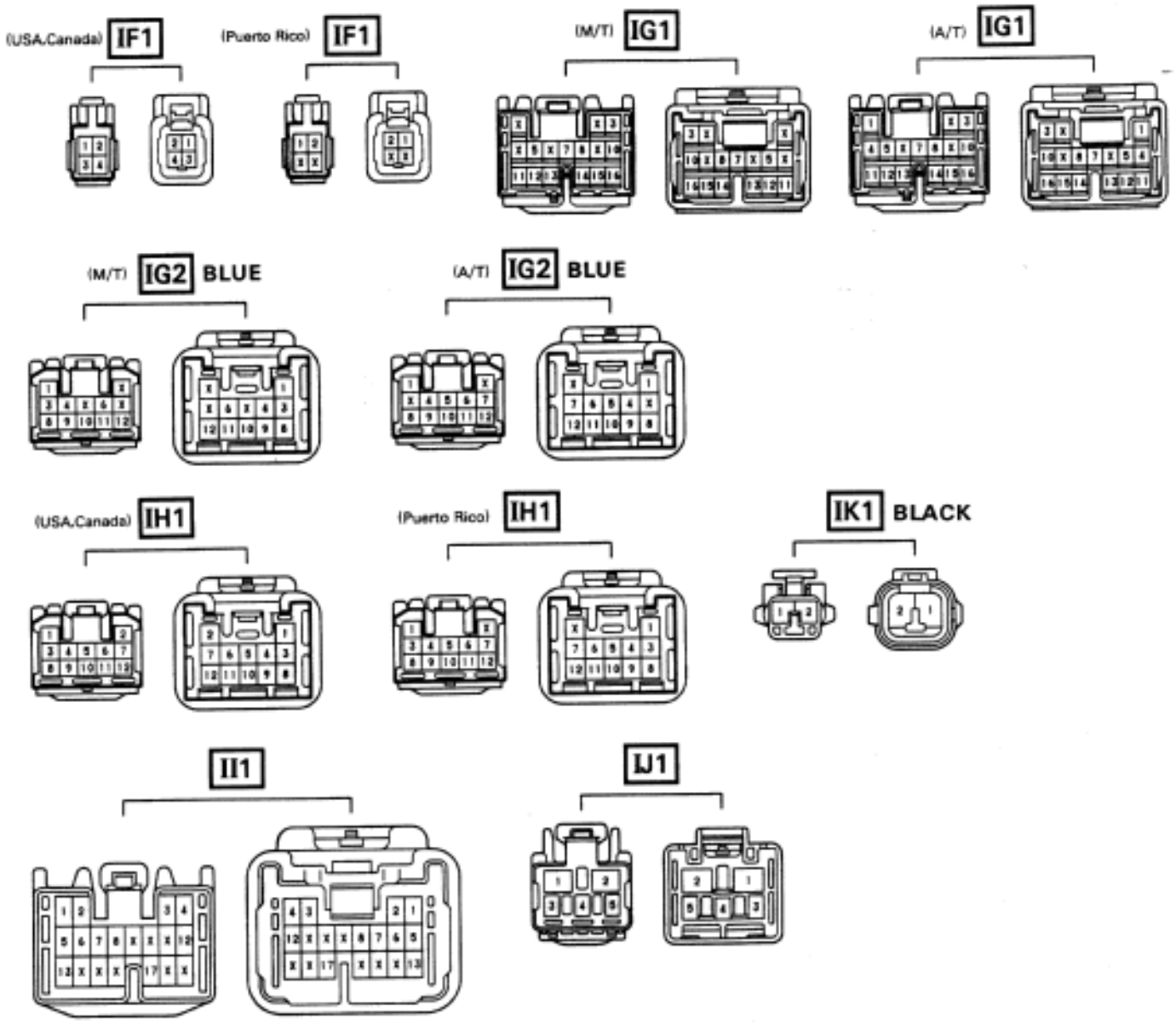

CODE	JOINING WIRE HARNESS AND WIRE HARNESS (CONNECTOR LOCATION)
IF1	INSTRUMENT PANEL WIRE AND SWITCH WIRE (NEAR THE STEERING COLUMN)
IG1	ENGINE WIRE AND INSTRUMENT PANEL WIRE (NEAR THE BLOWER UNIT)
IG2	
IH1	FRONT DOOR RH WIRE AND INSTRUMENT PANEL WIRE (RIGHT KICK PANEL)
II1	INSTRUMENT PANEL WIRE AND A/C SUB WIRE (NEAR THE BLOWER UNIT)
IJ1	INSTRUMENT PANEL NO. 2 WIRE AND INSTRUMENT PANEL WIRE (RIGHT KICK PANEL)
IK1	FLOOR NO.3 WIRE AND INSTRUMENT PANEL WIRE (UNDER THE DRIVER'S SEAT)

▽ : Location of Ground Points

[C/P]

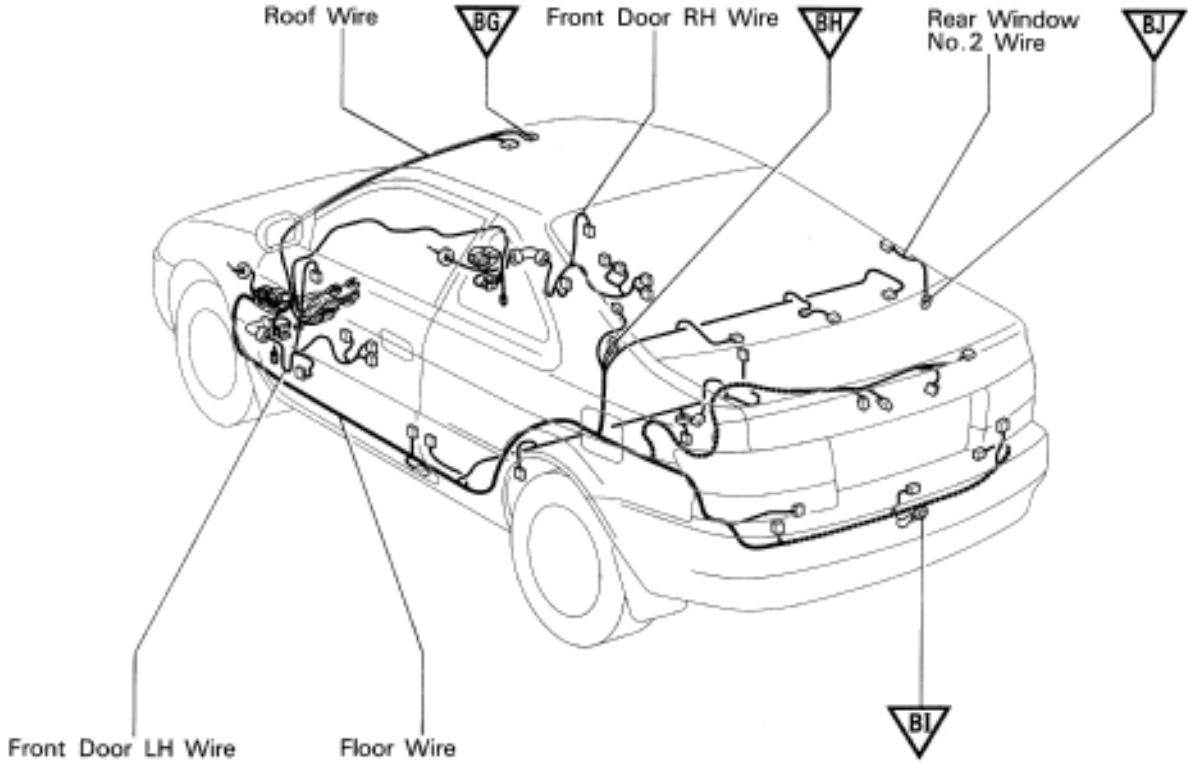

◯ : Location of Splice Points

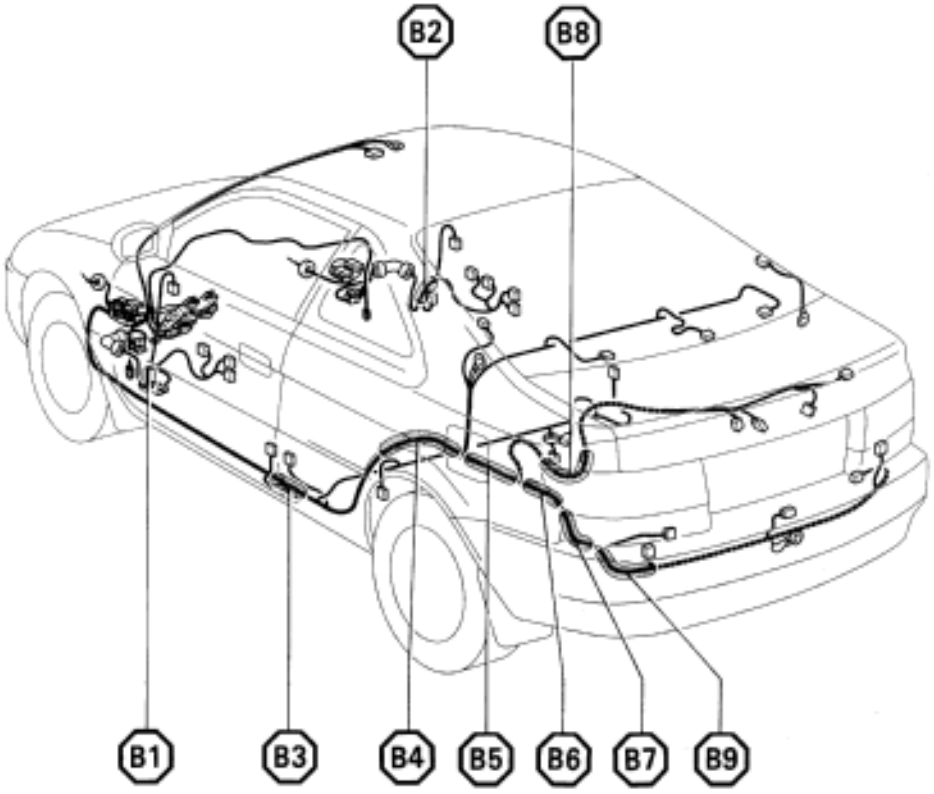

▽ : Location of Ground Points

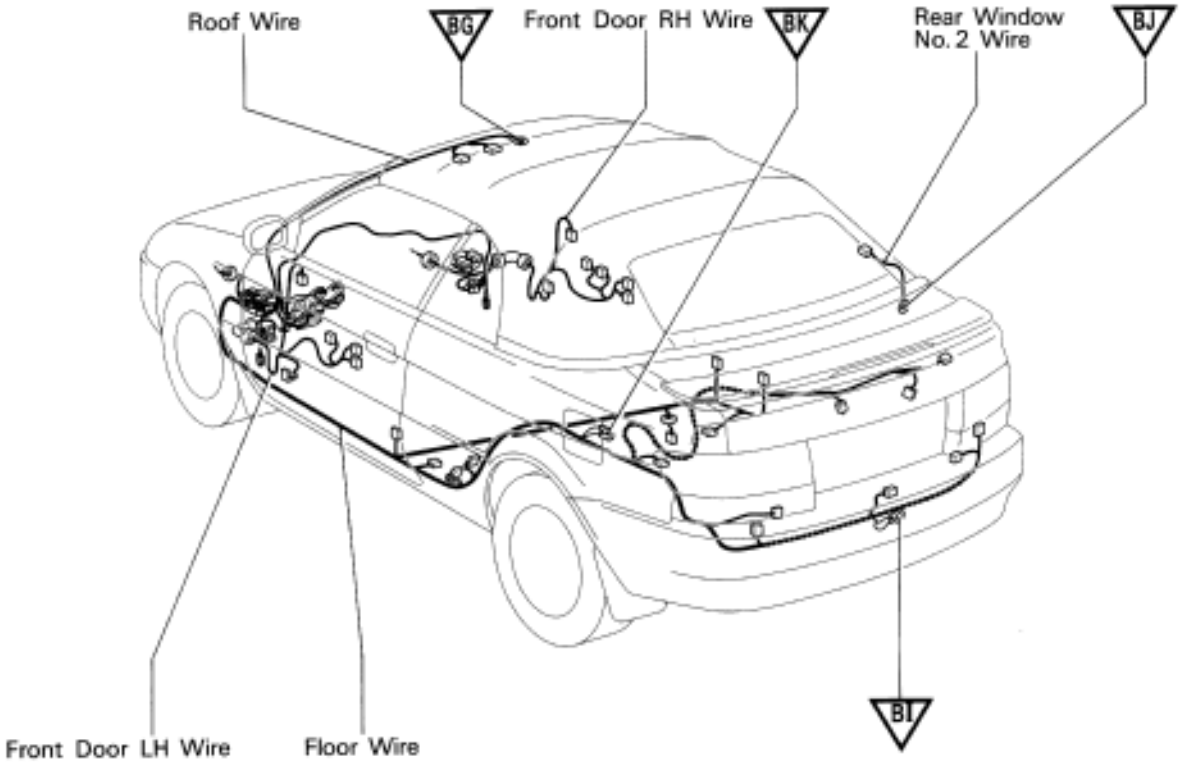

◯ : Location of Splice Points

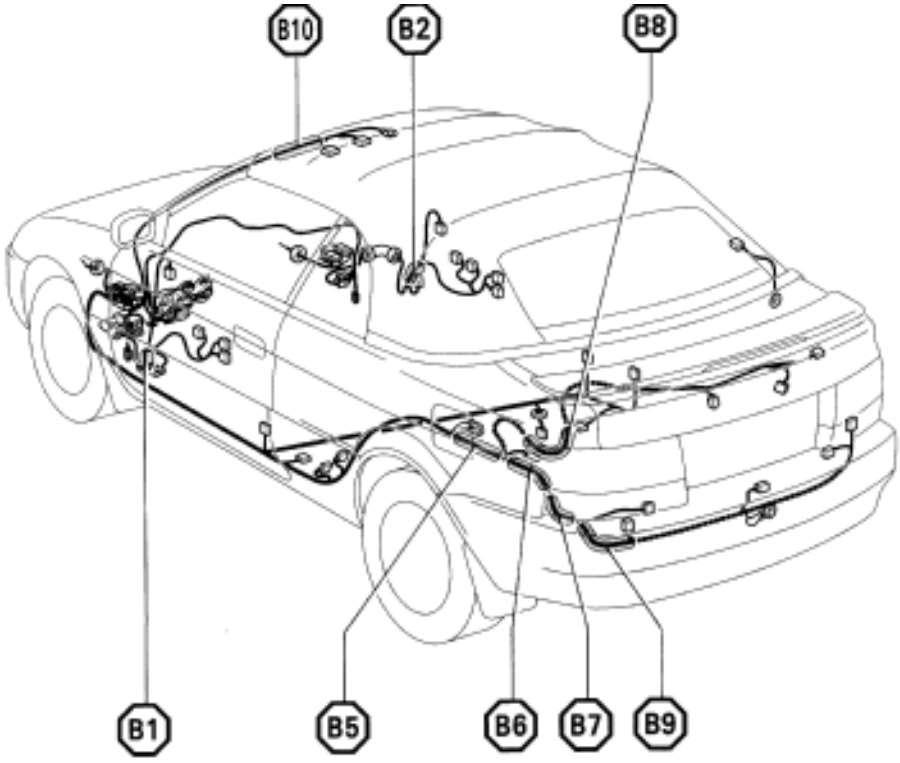

G ELECTRICAL WIRING ROUTING

Position of Parts in Engine Compartment

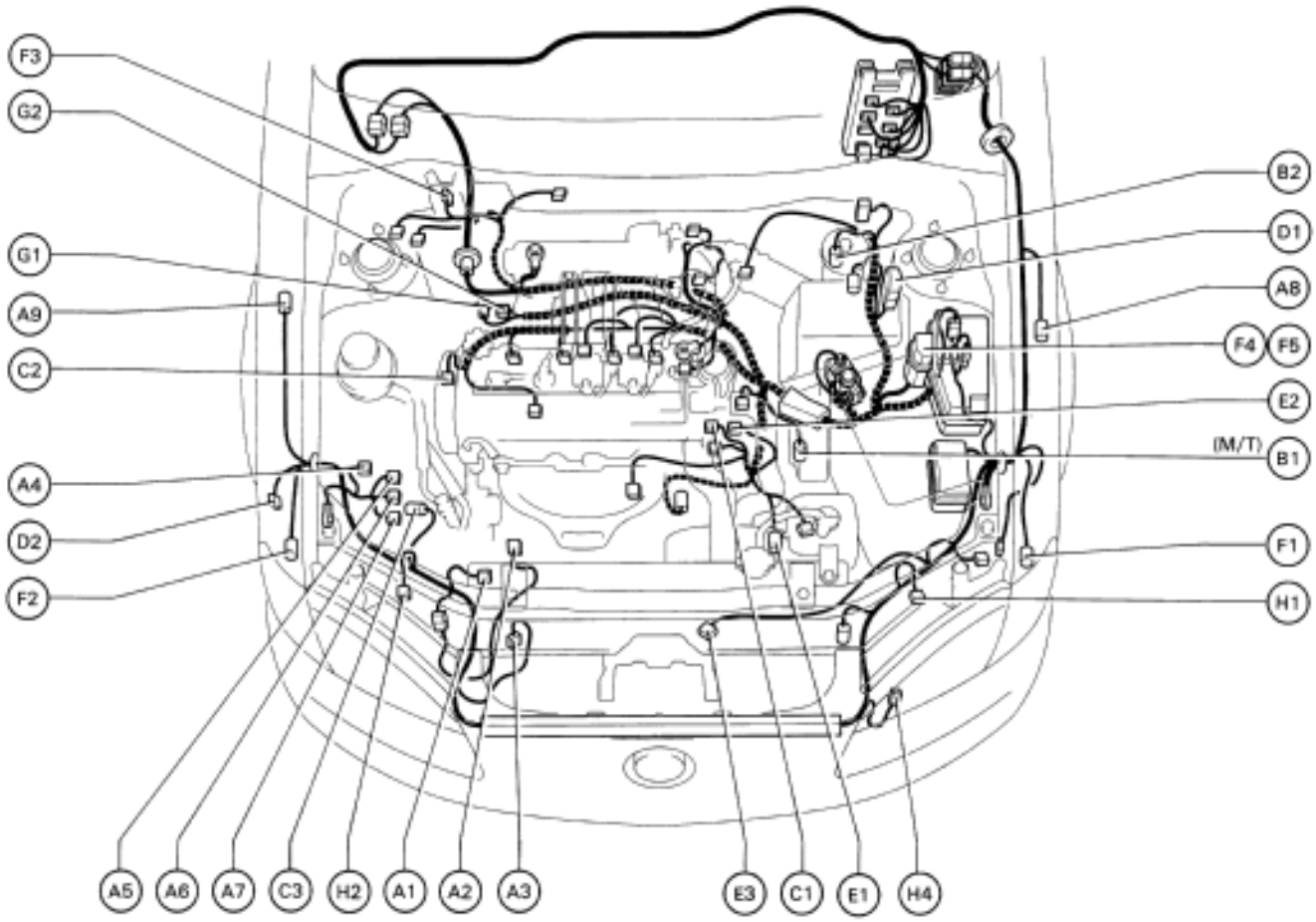

A 1 A/C Condenser Fan Motor
A 2 A/C Magnetic Clutch and Lock Sensor
A 3 A/C Triple Pressure SW(A/C Dual and Single Pressure SW)
A 4 ABS Actuator
A 5 ABS Actuator
A 6 ABS Relay
A 7 ABS Relay
A 8 ABS Speed Sensor Front LH
A 9 ABS Speed Sensor Front RH

B 1 Back–Up Light SW (M/T)
B 2 Brake Fluid Level Warning SW

C 1 Camshaft Position Sensor
C 2 Crankshaft Position Sensor
C 3 Cruise Control Actuator

D 1 Data Link Connector 1
D 2 Daytime Running Light Resistor

E 1 Electronically Controlled Transmission Solenoid
E 2 Engine Coolant Temp. Sensor
E 3 Engine Hood Courtesy SW

F 1 Front Turn Signal Light and Parking Light LH
F 2 Front Turn Signal Light and Parking Light RH
F 3 Front Wiper Motor
F 4 Fusible Link Block
F 5 Fusible Link Block

G 1 Generator
G 2 Generator

H 1 Headlight LH
H 2 Headlight RH
H 4 Horn

Position of Parts in Engine Compartment

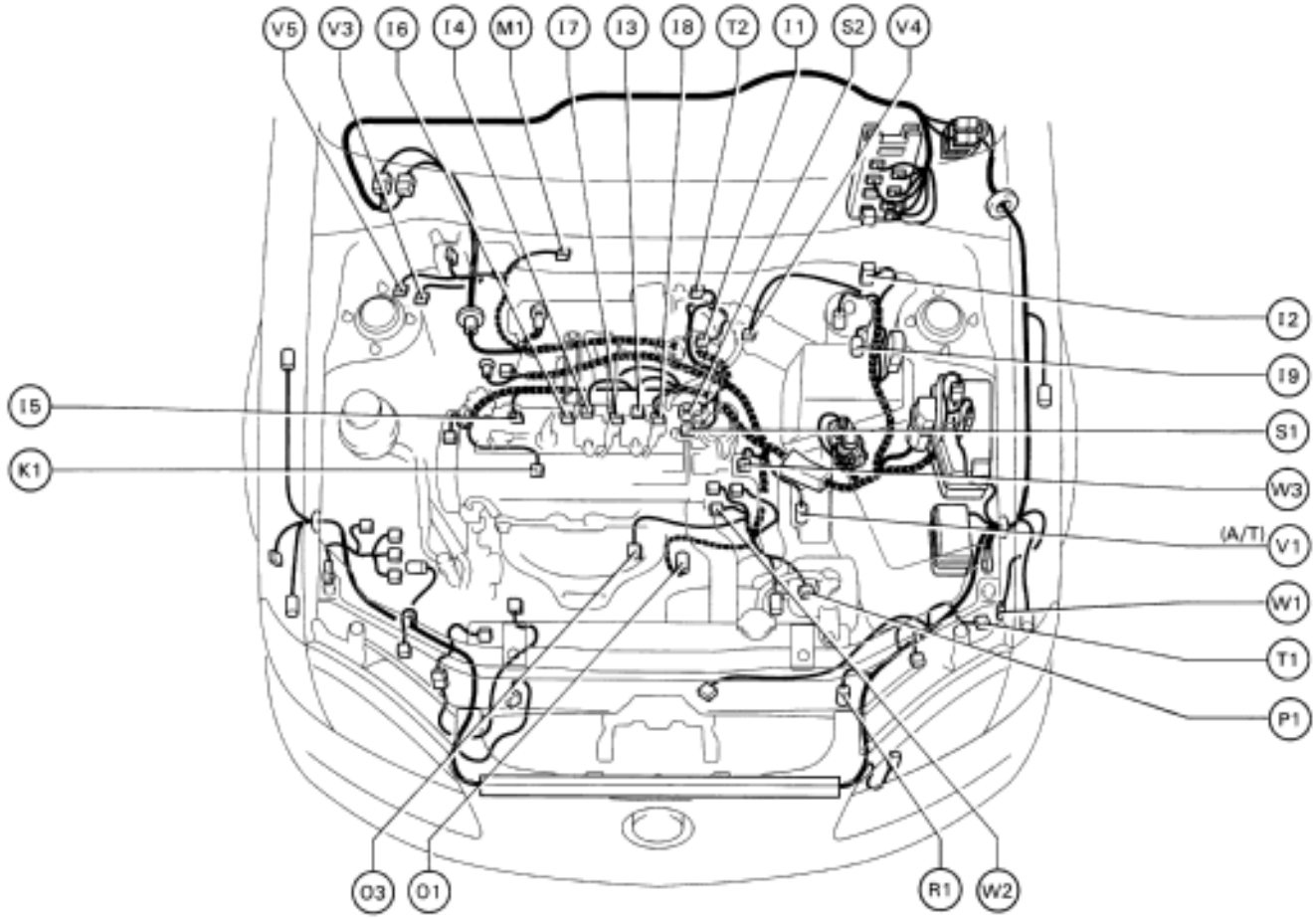

I 1 Idle Air Control Valve
I 2 Igniter
I 3 Ignition Coil No.1
I 4 Ignition Coil No.2
I 5 Injector No.1
I 6 Injector No.2
I 7 Injector No.3
I 8 Injector No.4
I 9 Intake Air Temp. Sensor

K 1 Knock Sensor

M 1 Manifold Absolute Pressure Sensor

O 1 Oil Pressure SW
O 3 Oxygen Sensor(Bank 1 Sensor 1)

P 1 Park/Neutral Position SW,A/T Position SW and Back–Up Light SW(A/T)

R 1 Radiator Fan Motor

S 1 Starter
S 2 Starter

T 1 Theft Deterrent Horn
T 2 Throttle Position Sensor

V 1 Vehicle Speed Sensor(Electronically Controlled Transmission)
V 3 Vapor Pressure Sensor
V 4 VSV(EVAP)
V 5 VSV(Vapor Pressure Sensor)

W 1 Washer Motor
W 2 Water Temp. Sender
W 3 Water Temp. SW(Radiator Fan)

Position of Parts in Instrument Panel

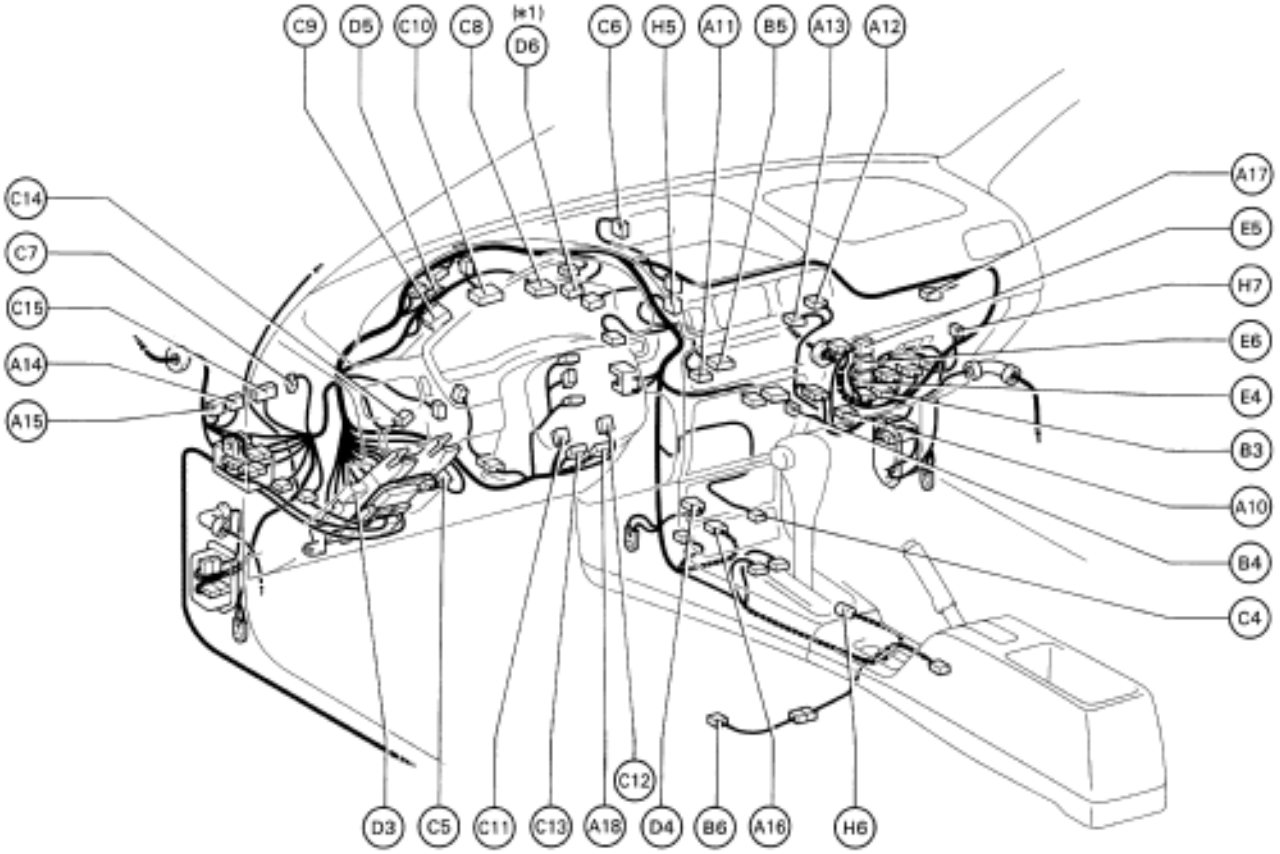

*1: w/o Theft Deterrent System, w/ Door Lock Control

A 10 A/C Amplifier
A 11 A/C SW
A 12 A/C Magnetic Clutch Relay
A 13 A/C Thermistor
A 14 ABS ECU
A 15 ABS ECU
A 16 Airbag Sensor Assembly
A 17 Airbag Squib(Front Passenger's Airbag Assembly)
A 18 Airbag Squib(Steering Wheel Pad)

B 3 Blower Motor
B 4 Blower Resistor
B 5 Blower SW
B 6 Buckle SW LH

C 4 Cigarette Lighter
C 5 Circuit Opening Relay
C 6 Clock
C 7 Clutch Start SW
C 8 Combination Meter
C 9 Combination Meter
C 10 Combination Meter
C 11 Combination SW
C 12 Combination SW
C 13 Combination SW
C 14 Cruise Control Clutch SW
C 15 Cruise Control ECU

D 3 Data Link Connector 3
D 4 Daytime Running Light Relay(Main)
D 5 Diode(Daytime Running Light System)
D 6 Door Lock Control Relay

E 4 Engine Control Module
E 5 Engine Control Module
E 6 Engine Control Module

H 5 Hazard SW
H 6 Heated Oxygen Sensor(Bank 1 Senser 2)
H 7 Heater Relay

Position of Parts in Instrument Panel

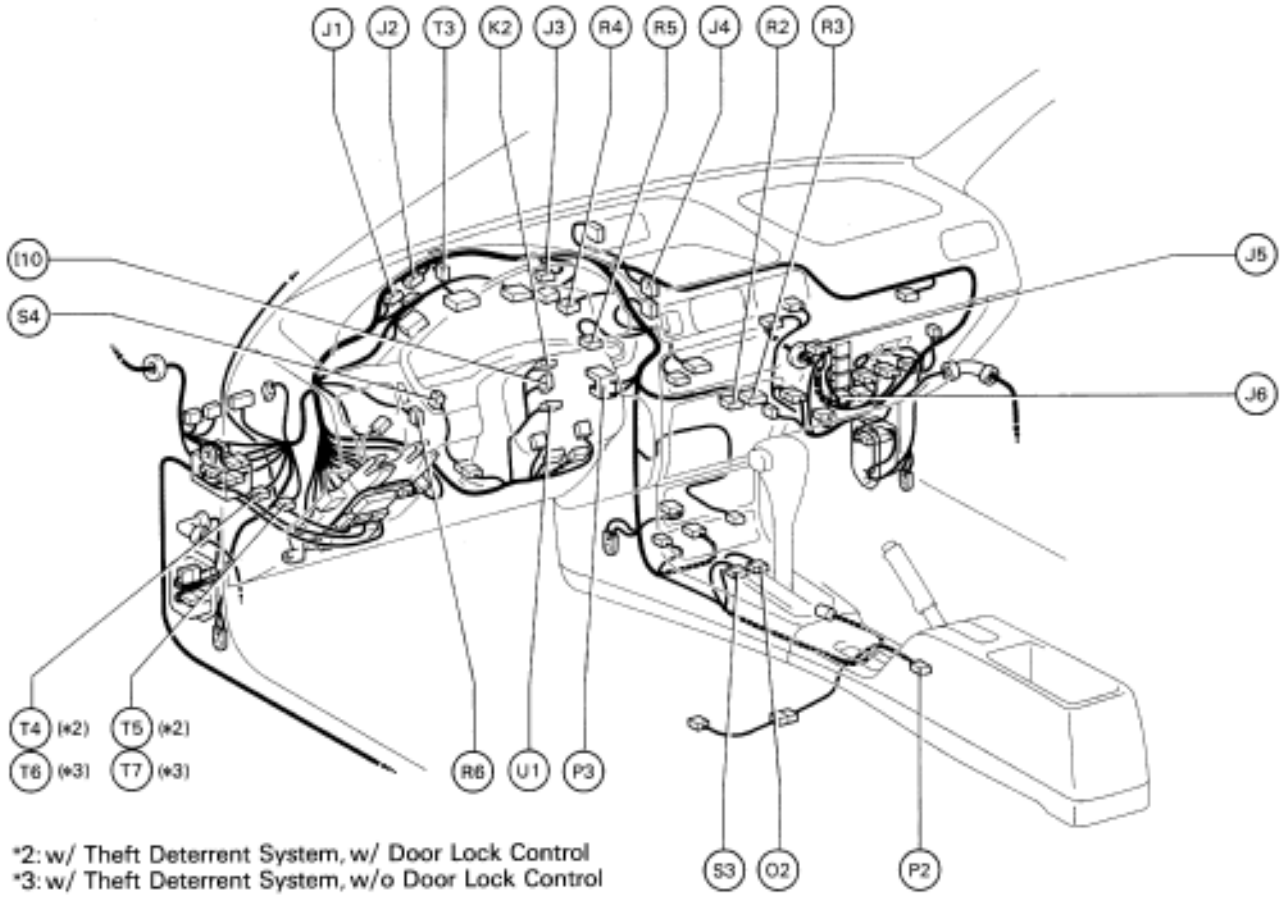

I 10 Ignition SW

J 1 Junction Connector
J 2 Junction Connector
J 3 Junction Connector
J 4 Junction Connector
J 5 Junction Connector
J 6 Junction Connector

K 2 Key Interlock Solenoid

O 2 O/D Main SW and A/T Shift Lever Illumination

P 2 Parking Brake SW
P 3 Power Main Relay and Power Fuse

R 2 Radio and Player
R 3 Radio and Player
R 4 Rear Window Defogger Relay
R 5 Rear Window Defogger SW
R 6 Rheostat

S 3 Shift Lock ECU
S 4 Stop Light SW

T 3 Turn Signal Flasher
T 4 Theft Deterrent and Door Lock Control ECU
T 5 Theft Deterrent and Door Lock Control ECU
T 6 Theft Deterrent ECU
T 7 Theft Deterrent ECU

U 1 Unlock Warning SW

Position of Parts in Body

[C/P]

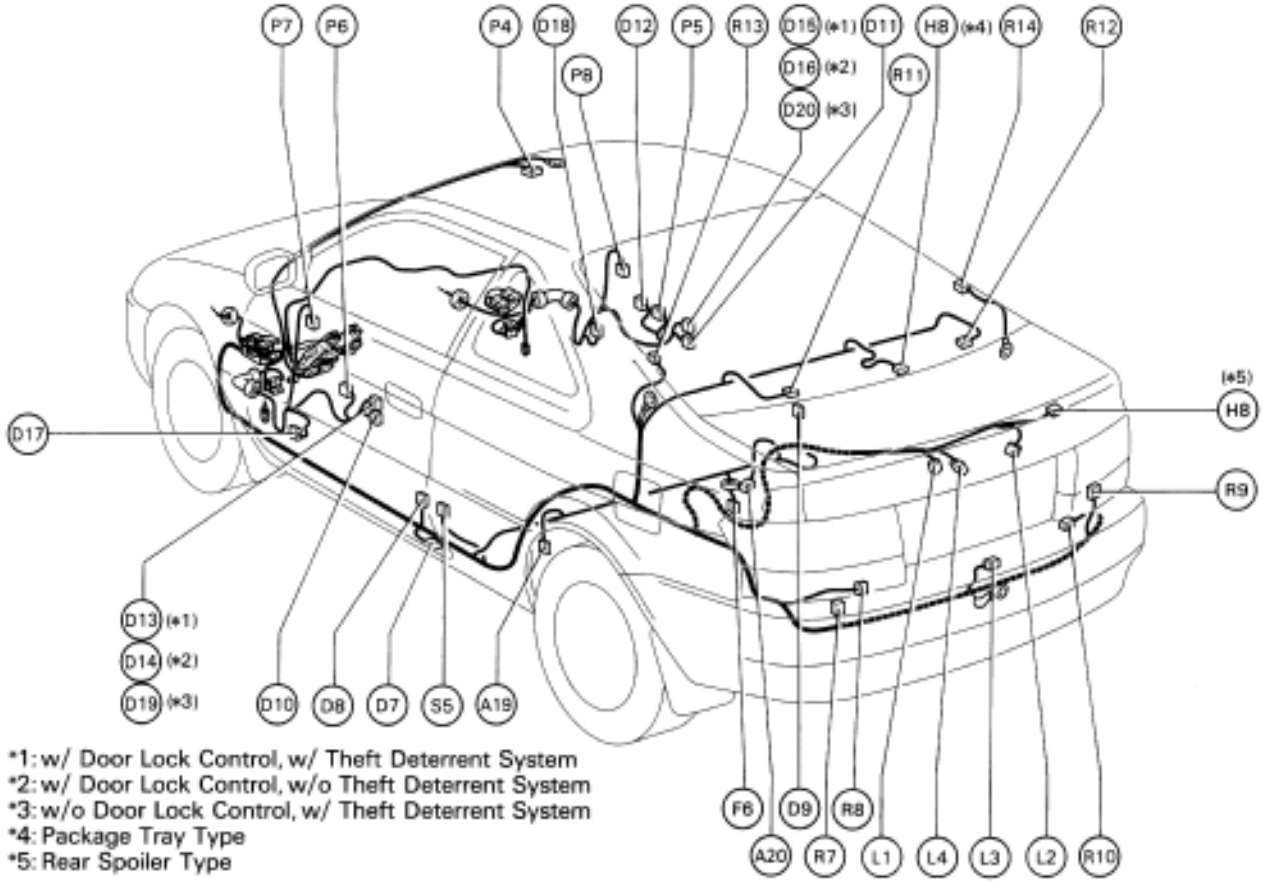

A 19 ABS Speed Sensor Sensor Rear LH
A 20 ABS Speed Sensor Rear RH

D 7 Diode(Theft Deterrent System)
D 8 Door Courteay SW LH
D 9 Door Courtesy SW RH
D 10 Door Key Lock and Unlock SW LH
D 11 Door Key Lock and Unlock SW RH
D 12 Door Lock Control SW RH
D 13 Door Lock Motor and Door Unlock Detection SW LH
D 14 Door Lock Motor and Door Key Lock and Unlock SW LH
D 15 Door Lock Motor and Door Unlock Detection SW RH
D 16 Door Lock Motor and Door Key Lock and Unlock SW RH
D 17 Door Speaker LH
D 18 Door Speaker RH
D 19 Door Unlock Detection SW LH
D 20 Door Unlock Detection SW RH

F 6 Fuel Sender and Pump

H 8 High Mounted Stop Light

L 1 License Plate Light LH
L 2 License Plate Light RH
L 3 Luggage Compartment Courtesy SW
L 4 Luggage Compartment Key Unlock SW

P 4 Personal Light
P 5 Power Window Control SW RH
P 6 Power Window Master SW and Door Lock Control SW LH
P 7 Power Window Motor LH
P 8 Power WIndow Motor RH

R 7 Rear Combination Light LH
R 8 Rear Combination Light LH
R 9 Rear Combination Light RH
R 10 Rear Combination Light RH
R 11 Rear Speaker LH
R 12 Rear Speaker RH
R 13 Rear Window Defogger(+)
R 14 Rear Window Defogger(–)

S 5 Seat Belt Retractor SW

Position of Parts in Body

[Convertible]

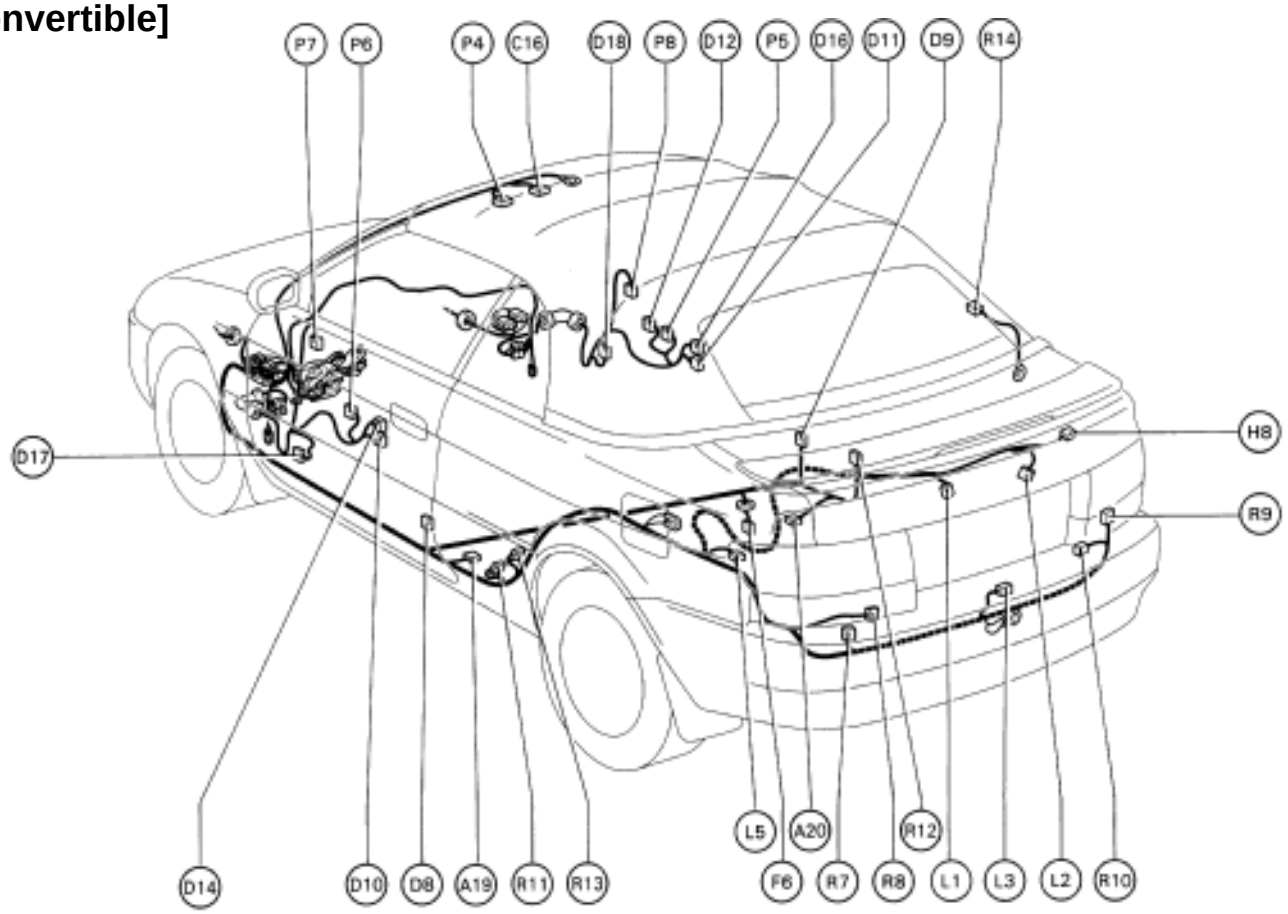

A 19 ABS Speed Sensor Rear LH
A 20 ABS Speed Sensor Rear RH

C 16 Courtesy Light

D 8 Door Courteay SW LH
D 9 Door Courtesy SW RH
D 10 Door Key Lock and Unlock SW LH
D 11 Door Key Lock and Unlock SW RH
D 12 Door Lock Control SW RH
D 14 Door Lock Motor and Door Key Lock and Unlock SW LH
D 16 Door Lock Motor and Door Key Lock and Unlock SW RH
D 17 Door Speaker LH
D 18 Door Speaker RH

F 6 Fuel Sender and Pump

H 8 High Mounted Stop Light

L 1 License Plate Light LH
L 2 License Plate Light RH
L 3 Luggage Compartment Courtesy SW
L 5 Luggage Compartment Light

P 4 Personal Light
P 5 Power Window Control SW RH
P 6 Power Window Master SW and Door Lock Control SW LH
P 7 Power Window Motor LH
P 8 Power WIndow Motor RH

R 7 Rear Combination Light LH
R 8 Rear Combination Light LH
R 9 Rear Combination Light RH
R 10 Rear Combination Light RH
R 11 Rear Speaker LH
R 12 Rear Speaker RH
R 13 Rear Window Defogger(+)
R 14 Rear Window Defogger(–)

E GLOSSARY OF TERMS AND SYMBOLS

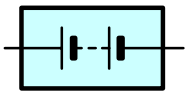

BATTERY
Stores chemical energy and converts it into electrical energy. Provides DC current for the auto's various electrical circuits.

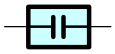

CAPACITOR (Condenser)
A small holding unit for temporary storage of electrical voltage.

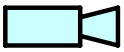

CIGARETTE LIGHTER
An electric resistance heating element.

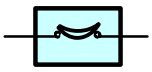

CIRCUIT BREAKER
Basically a reusable fuse, a circuit breaker will heat and open if too much current flows through it. Some units automatically reset when cool, others must be manually reset.



DIODE
A semiconductor which allows current flow in only one direction.



DIODE, ZENER
A diode which allows current flow in one direction but blocks reverse flow only up to a specific voltage. Above that potential, it passes the excess voltage. This acts as a simple voltage regulator.



PHOTODIODE
The photodiode is a semiconductor which controls the current flow according to the amount of light.

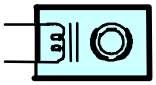

DISTRIBUTOR, IIA
Channels high–voltage current from the ignition coil to the individual spark plugs.

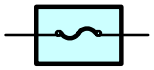

(for Medium Current Fuse)

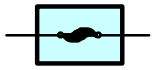

(for High Current Fuse or Fusible Link.)

FUSE
A thin metal strip which burns through when too much current flows through it, thereby stop–ping current flow and protecting a circuit from damage.

FUSIBLE LINK
A heavy–gauge wire placed in high amperage circuits which burns through on overloads, thereby protecting the circuit. The numbers indicate the cross–section surface area of the wires.

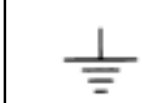

GROUND
The point at which wiring attaches to the Body, thereby providing a return path for an electrical circuit; without a ground, current cannot flow.

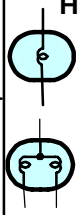

HEADLIGHTS
1. **SINGLE FILAMENT**
2. **DOUBLE FILAMENT**

Current flow causes a headlight filament to heat up and emit light. A headlight may have either a single (1) filament or a double (2) filament.

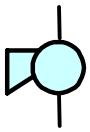

HORN
An electric device which sounds a loud audible signal.

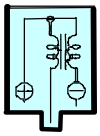

IGNITION COIL
Convert low–voltage DC current into high–voltage ingition current for firing the spark plugs.



LIGHT
Current flow through a filament causes the filament to heat up and emit light.



LED (LIGHT EMITTING DIODE)
Upon current flow, these diodes emit light without producing the heat of a comparable light.



METER, ANALOG
Current flow activates a magnetic coil which causes a needle to move, thereby providing a relative display against a background calibration.



METER, DIGITAL
Current flow activates one or many LED's, LCD's, or fluoresent displays, which provide a relative or digital display.



MOTOR
A power unit which converts electrical energy into mechanical energy, especially rotary motion.

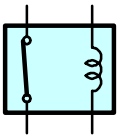

RELAY

1. **NORMALLY CLOSED**
2. **NORMALLY OPEN**

Basically, an electrically operated switch which may be normally closed (1) or open (2). Current flow through a small coil creates a magnetic field which either opens or closes an attached switch.

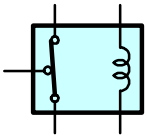

RELAY, DOUBLE THROW

A relay which passes current through one set of contacts or the other.

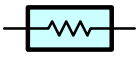

RESISTOR

An electrical component with a fixed resistance, placed in a circuit to reduce voltage to a specific value.

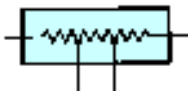

RESISTOR, TAPPED

A resistor which supplies two or more different non adjustable resistance values.



RESISTOR, VARIABLE or RHEOSTAT

A controllable resistor with a variable rate of resistance. Also called a potentiometer or rheostat.

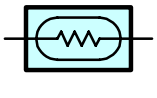

SENSOR (Thermistor)

A resistor which varies its resistance with temperature.

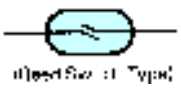

SENSOR, SPEED

Uses magnetic impulses to open and close a switch to create a signal for activation of other components.

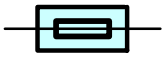

SHORT PIN

Used to provide an unbroken connection within a juction block.

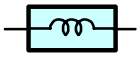

SOLENOID

An electromagnetic coil which forms a magnetic field when current flows, to move a plunger, etc.



SPEAKER

An electromechanical device which creates sound waves from current flow.

SWITCH, MANUAL

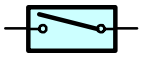

1. **NORMALLY OPEN**

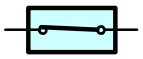

2. **NORMALLY CLOSED**

Open and closes circuits, thereby stopping (1) or allowing (2) current flow.

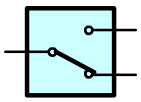

SWITCH, DOUBLE THROW

A switch which continuously passes cureent through one set of contacts or the other.

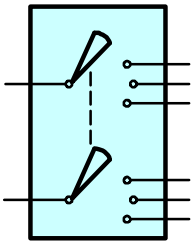

SWITCH, IGNITION

A key operated switch with several positions which allows various circuits, particularly the primary ignition circuit, to become operational.



SWITCH, WIPER PARK

Automatically returns wipers to the stop position when the wiper switch is turned off.

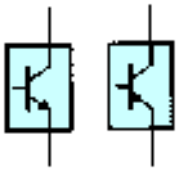

TRANSISTOR

A solid state device typically used as an electronic relay; stops or passes current depending on the voltage applied at “base.”

WIRES



(1) **NOT CONNECTED**



(2) **SPLICED**

Wires are always drawn as straight lines on wiring diagrams. Crossed wires (1) without a black dot at the junction are not joined; crossed wires (2) and a black dot or octagonal (⬡) mark at the juction as spliced (joined) connections.

J GROUND POINT

*1 : W/ THEFT DETERRENT SYSTEM
*2 : W/O THEFT DETERRENT SYSTEM
*3 : W/ THEFT DETERRENT SYSTEM AND W/ DOOR LOCK CONTROL
*4 : W/ THEFT DETERRENT SYSTEM AND W/O DOOR LOCK CONTROL

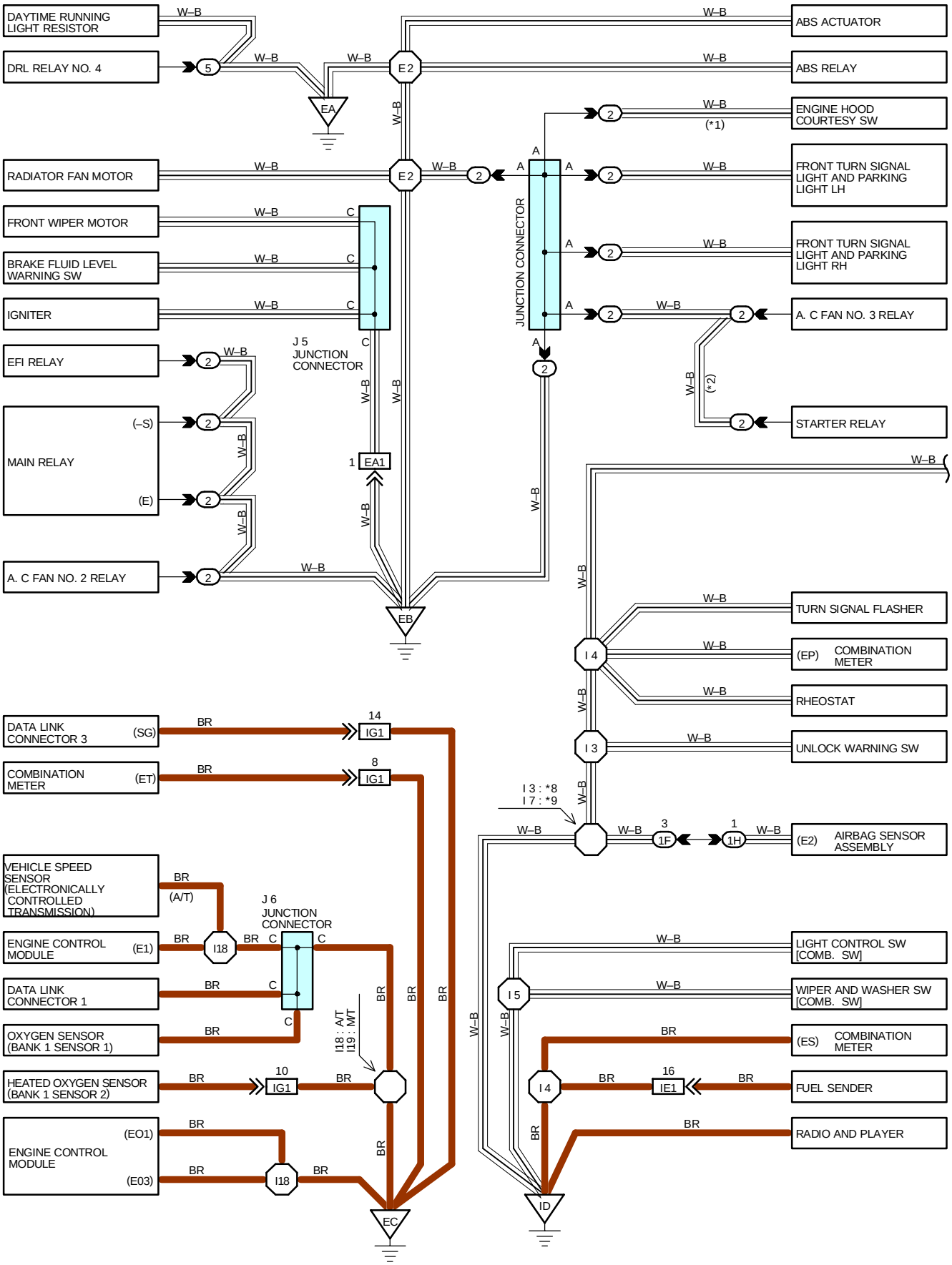

*5 : W/O THEFT DETERRENT SYSTEM AND W/ DOOR LOCK CONTROL
*6 : PACKAGE TRAY TYPE
*7 : REAR SPOILER TYPE
*8 : USA, CANADA
*9 : PUERUTO RICO
*10 : USA
*11 : PUERUTO RICO, CANADA
*12 : C/P
*13 : CONVERTIBLE

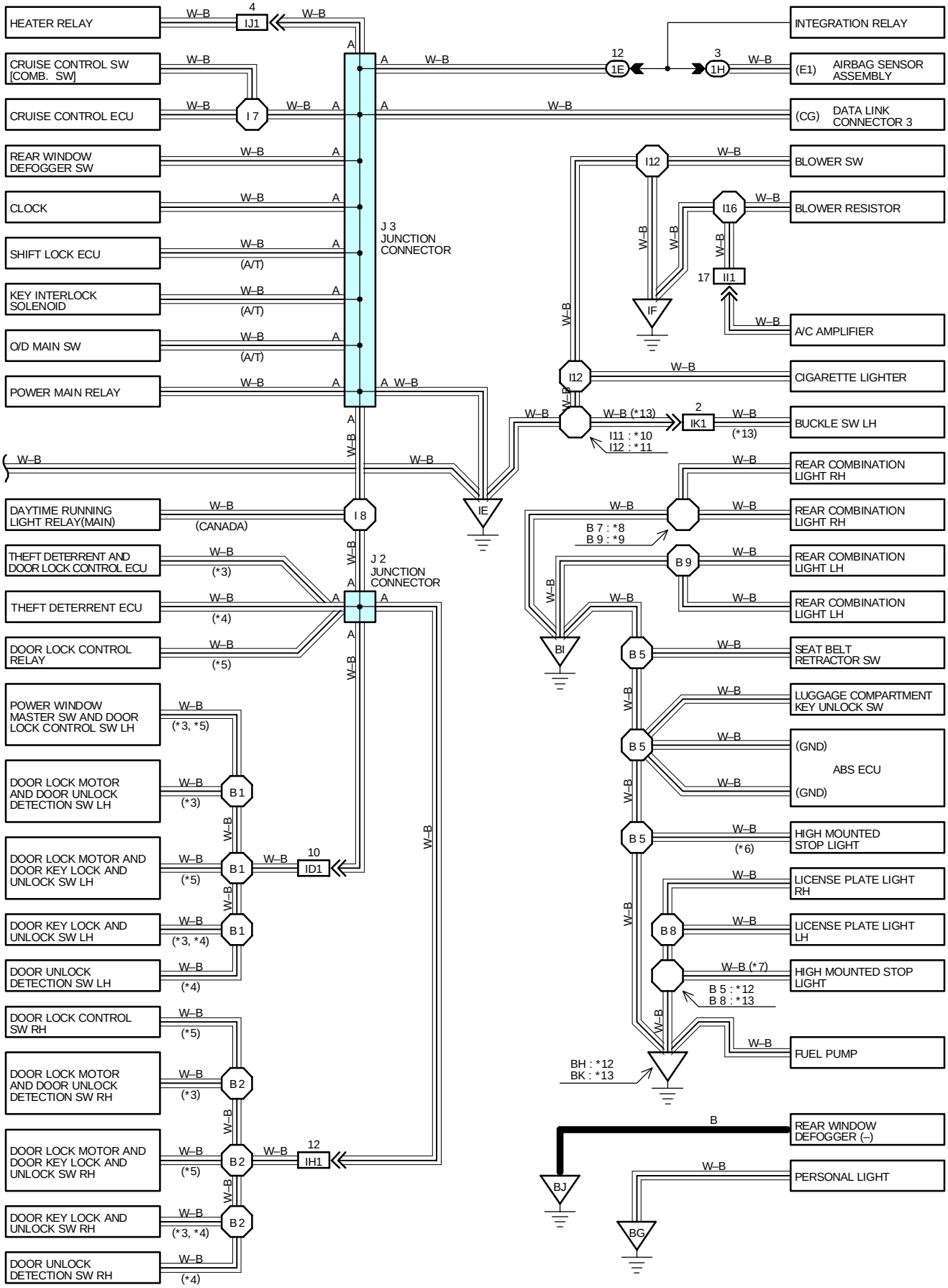

J GROUND POINT

: PARTS LOCATION

CODE	SEE PAGE	CODE	SEE PAGE	CODE	SEE PAGE
J2	27	J5	27		
J3	27	J6	27		

: RELAY BLOCKS

CODE	SEE PAGE	RELAY BLOCKS (RELAY BLOCK LOCATION)
2	22	ENGINE ROOM R/B (ENGINE COMPARTMENT LEFT)
5	23	ENGINE ROOM R/B NO. 5 (ENGINE COMPARTMENT LEFT)

: JUNCTION BLOCK AND WIRE HARNESS CONNECTOR

CODE	SEE PAGE	JUNCTION BLOCK AND WIRE HARNESS (CONNECTOR LOCATION)
1E	20	INSTRUMENT PANEL WIRE AND DRIVER SIDE J/B (LEFT KICK PANEL)
1F		
1H		

: CONNECTOR JOINING WIRE HARNESS AND WIRE HARNESS

CODE	SEE PAGE	JOINING WIRE HARNESS AND WIRE HARNESS (CONNECTOR LOCATION)
EA1	30	ENGINE WIRE AND ENGINE ROOM MAIN WIRE (INSIDE OF THE ENGINE ROOM R/B)
ID1	32	FRONT DOOR LH WIRE AND INSTRUMENT PANEL WIRE (LEFT KICK PANEL)
IE1	32	INSTRUMENT PANEL WIRE AND FLOOR WIRE (LEFT KICK PANEL)
IG1	34	ENGINE WIRE AND INSTRUMENT PANEL WIRE (NEAR THE BLOWER UNIT)
IH1	34	FRONT DOOR RH WIRE AND INSTRUMENT PANEL WIRE (RIGHT KICK PANEL)
II1	34	INSTRUMENT PANEL WIRE AND A/C SUB WIRE (NEAR THE BLOWER UNIT)
IJ1	34	INSTRUMENT PANEL NO. 2 WIRE AND INSTRUMENT PANEL WIRE (RIGHT KICK PANEL)
IK1	34	FLOOR NO. 3 WIRE AND INSTRUMENT PANEL WIRE (UNDER THE DRIVER'S SEAT)

: GROUND POINTS

CODE	SEE PAGE	GROUND POINTS LOCATION
EA	30	FRONT SIDE OF THE RIGHT FENDER
EB	30	FRONT SIDE OF THE LEFT FENDER
EC	30	RIGHT SIDE OF THE SURGE TANK
ID	32	LEFT KICK PANEL
IE	32	INSTRUMENT PANEL BRACE LH
IF	32	RIGHT KICK PANEL
BG	36 (C/P) 37 (CONVERTIBLE)	RIGHT SIDE OF PERSONAL LIGHT
BH	36 (C/P)	LEFT SIDE OF THE UPPER BACK PANEL
BI	36 (C/P) 37 (CONVERTIBLE)	LOWER BACK PANEL CENTER
BJ	36 (C/P) 37 (CONVERTIBLE)	RIGHT SIDE OF THE UPPER BACK PANEL
BK	37 (CONVERTIBLE)	UPPER THE REAR WHEEL HOUSE LH

: **SPLICE POINTS**

CODE	SEE PAGE	WIRE HARNESS WITH SPLICE POINTS	CODE	SEE PAGE	WIRE HARNESS WITH SPLICE POINTS
E2	30	ENGINE ROOM MAIN WIRE	I19	34	ENGINE WIRE
I3	34	INSTRUMENT PANEL WIRE	B1	36	FRONT DOOR LH WIRE
I4			B2	36	FRONT DOOR RH WIRE
I5			B5	36	FLOOR WIRE
I7			B7		
I8			B8	36 (C/P)	
I11				37 (CONVERTIBLE)	
I12			B9	36 (C/P)	
I16				37 (CONVERTIBLE)	
I18	34	ENGINE WIRE			

J2 GRAY

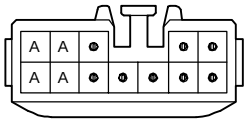

(HINT : SEE PAGE 7)

J3 BLUE

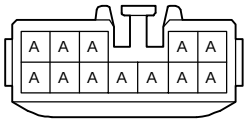

(HINT : SEE PAGE 7)

J5 GRAY

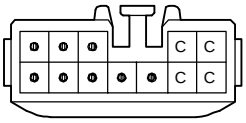

(HINT : SEE PAGE 7)

J6 GRAY

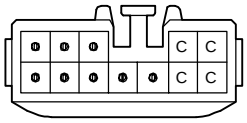

(HINT : SEE PAGE 7)

This manual provides information on the electrical circuits installed on vehicles by dividing them into a circuit for each system.

The actual wiring of each system circuit is shown from the point where the power source is received from the battery as far as each ground point. (All circuit diagrams are shown with the switches in the OFF position.)

When troubleshooting any problem, first understand the operation of the circuit where the problem was detected (see System Circuit section), the power source supplying power to that circuit (see Power Source section), and the ground points (see Ground Points section). See the System Outline to understand the circuit operation.

When the circuit operation is understood, begin troubleshooting of the problem circuit to isolate the cause. Use Relay Location and Electrical Wiring Routing sections to find each part, junction block and wiring harness connectors, wiring harness and wiring harness connectors, splice points, and ground points of each system circuit. Internal wiring for each junction block is also provided for better understanding of connection within a junction block.
Wiring related to each system is indicated in each system circuit by arrows (from__,to__). When overall connections are required, see the Overall Electrical Wiring Diagram at the end of this manual.

* The system shown here is an EXAMPLE ONLY. It is different to the actual circuit shown in the SYSTEM CIRCUITS SECTION.

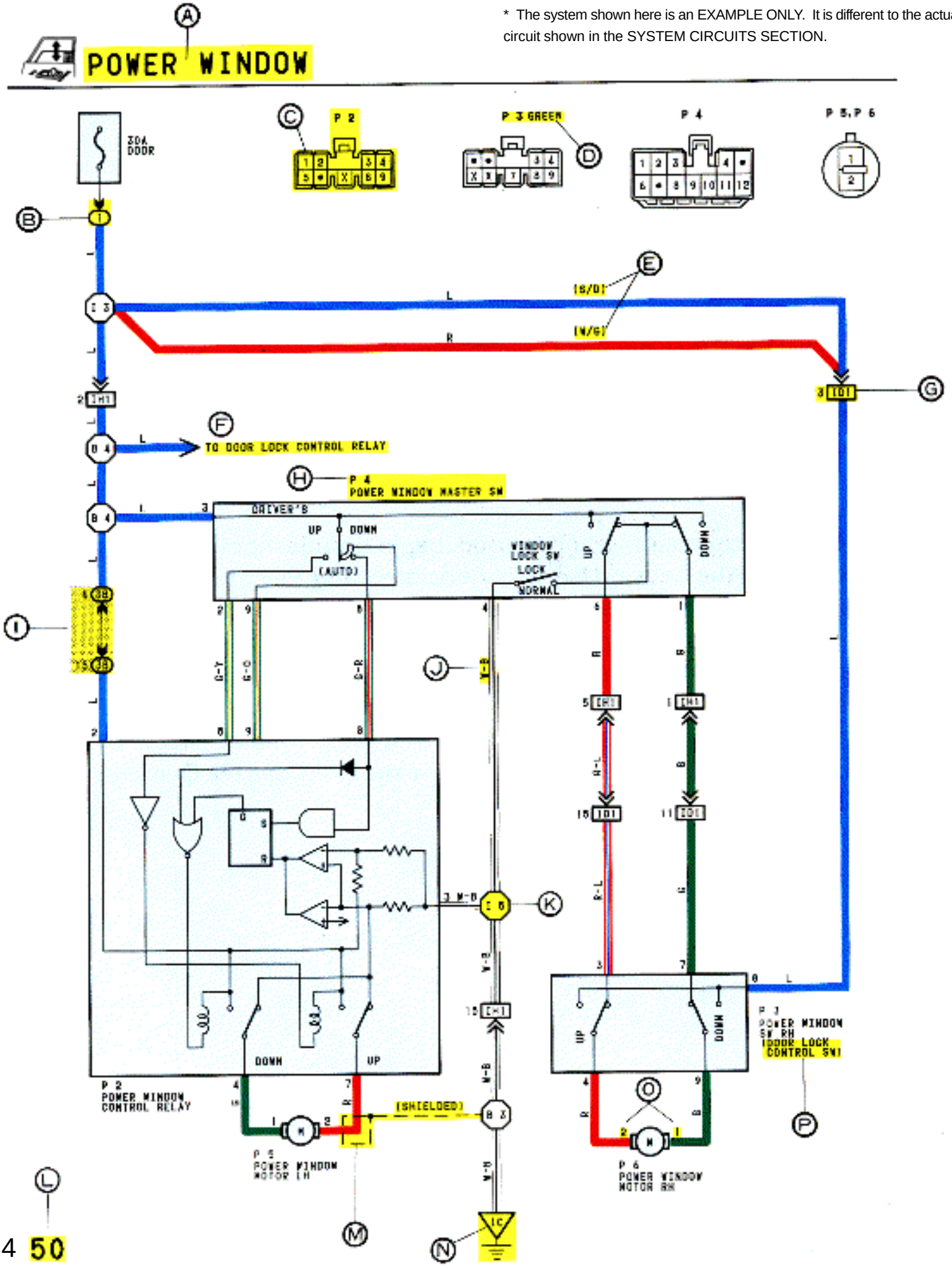

A : System Title

B : Indicates a Relay Block. No shading is used and only the Relay Block No. is shown to distinguish it from the J/B.

Example: (1) Indicates Relay Block No. 1.

C : Indicates the connector to be connected to a part (the numeral indicates the pin No.)
Explanation of pin use.

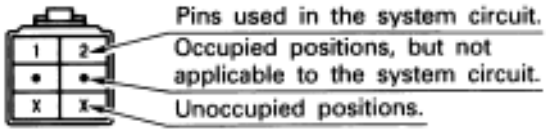

The pins shown are only for the highest grade, or only include those in the specification.

D : Connector Color Connectors not indicated are milky white in color:

E : ( ) is used to indicate different wiring and connector, etc. when the vehicle model, engine type, or specification is different.

F : Indicates related system.

G : Indicates the wiring harness and wiring harness connector. The wiring harness with male terminal is shown with arrows ( ).

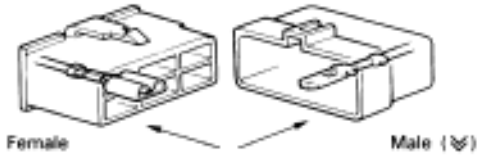

The first letter of the code for each wiring harness and wiring harness connector(s) indicates thecomponent's location, e.g, "E" for the Engine Compartment, "I" for the Instrument Panel and Surrounding area, and "B" for the Body and Surrounding area.

When more than one code has the first and second letters in common, followed by numbers (e.g, IH1, IH2), this indicates the same type of wiring harness and wiring harness connector.

H : Represents a part (all parts are shown in sky blue). The code is the same as the code used in parts position.

I : Junction Block (The number in the circle is the J/B No. and the connector code is shown beside it). Junction Blocks are shaded to clearly separate them from other parts .

Example:



3B indicates that it is inside Junction Block No. 3.

J : Indicates the wiring color.
Wire colors are indicated by an alphabetical code.

B = Black	L = Black	R = Red
BR = Brown	LG = Light Green	V = Violet
G = Green	O = Orange	W = White
GR = Gray	P = Pink	Y = Yellow

The first letter indicates the basic wire color and the second letter indicates the color of the stripe.

Example: L – Y



K : Indicates a wiring Splice Point (Codes are "E" for the Engine Room, "I" for the Instrument Panel, and "B" for the Body).

Example:



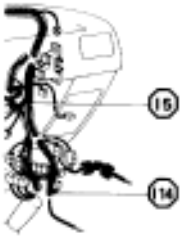

The Location of Splice Point I 5 is indicated by the shaded section.

L : Page No.

M : Indicates a shielded cable.



N : Indicates a ground point.

The first letter of the code for each ground point(s) indicates the component's location, e.g. "E" for the Engine Compartment, "I" for the Instrument Panel and Surrounding area, and "B" for the Body and Surrounding area.

O : Indicates the pin number of the connector.
The numbering system is different for female and male connectors.

lower right lower left



P : When 2 parts both use one connector in common, the parts connector name used in the wire routing section is shown in square brackets [ ].

B HOW TO USE THIS MANUAL

Q

SYSTEM OUTLINE

WITH THE IGNITION SW TURNED ON, THE CURRENT FLOWS TO **TERMINAL 3** OF THE POWER WINDOW MASTER SW, **TERMINAL 2** OF THE POWER WINDOW CONTROL RELAY AND **TERMINAL 8** OF THE POWER WINDOW SW THROUGH THE **DOOR** FUSE.

1. DRIVER'S WINDOW "MANUAL UP" OPERATION BY MASTER SW

HOLDING MANUAL SW (DRIVER'S) ON "UP" POSITION LOCATED IN POWER WINDOW MASTER SW, THE CURRENT FLOWS TO **TERMINAL 5** OF THE POWER WINDOW CONTROL RELAY THROUGH **TERMINAL 3** OF THE MASTER SW → **TERMINAL 2** TO OPERATE A POWER WINDOW CONTROL RELAY. THUS THE CURRENT INSIDE THE RELAY FLOWS FROM **TERMINAL 2** OF THE RELAY → **TERMINAL 1** → **TERMINAL 2** OF THE POWER WINDOW MOTOR → **TERMINAL 1** → **TERMINAL 4** OF THE RELAY → **TERMINAL 3** → TO **GROUND**. THE MOTOR TURNS TO ASCENT THE WINDOW. RELEASING THIS SW, THE ROTATION OF MOTOR IS STOPPED AND THE WINDOWS CAN STOP AT WILL POINT.

(FOR THE "MANUAL DOWN" OPERATION, CURRENT FLOWS IN THE REVERSE DIRECTION BECAUSE THE TERMINALS WHERE IT FLOW ARE CHANGED).

2. DRIVER'S WINDOW "AUTO DOWN" OPERATION BY MASTER SW

ONCE THE "AUTO DOWN" BUTTON OF THE MASTER SW IS PUSHED, THE CURRENT FLOW **TERMINAL 9** OF THE POWER WINDOW CONTROL RELAY THROUGH **TERMINAL 3** OF THE MASTER SW→ **TERMINALS 8** AND **9** TO OPERATE THE RELAY. THUS THE CURRENT INSIDE THE POWER WINDOW CONTROL RELAY FLOWS FROM **TERMINAL 2** OF THE RELAY → **TERMINAL 4** → **TERMINAL 1** OF THE POWER WINDOW MOTOR → **TERMINAL 2** → **TERMINAL 1** OF THE RELAY → **TERMINAL 3** → TO **GROUND**. THE MOTOR CONTINUES THE ROTATION ENABLING TO DESCENT THE WINDOW.

THE WINDOW DESCENDS TO THE END POSITION. THE CURRENT WILL BE CUT OFF TO RELEASE THE AUTO DOWN FUNCTION BASED ON THE INCREASING CURRENT BETWEEN **TERMINAL 2** OF THE RELAY AND **TERMINAL 1** IN RELAY.

3. DRIVER'S WINDOW AUTO DOWN RELEASE OPERATION BY MASTER SW

HOLDING THE MANUAL SW (DRIVER'S) ON "UP" POSITION IN OPERATING AUTO DOWN. THE CURRENT FROM **TERMINAL 3** OF THE MASTER SW PASSING **TERMINAL 2** FLOWS **TERMINAL 5** OF THE RELAY AND RELEASES THE AUTO DOWN FUNCTION IN THE POWER WINDOW CONTROL RELAY. RELEASING THE HAND FROM SW, WINDOW STOPS AND CONTINUING ON TOUCHING SW. THE FUNCTION SWITCHES TO MANUAL UP OPERATION.

4. PASSENGER'S WINDOW UP OPERATION (MASTER SW) AND WINDOW LOCK SW OPERATION

HOLDING PASSENGER'S WINDOW SW (MASTER SW) ON "UP", THE CURRENT FLOWS FROM **TERMINAL 3** OF THE MASTER SW PASSING **TERMINAL 6** TO **TERMINAL 3** OF THE POWER WINDOW SW (PASSENGER'S) → **TERMINAL 4 TERMINAL** → **2** OF THE MOTOR → **TERMINAL 1** → **TERMINAL 9** OF THE POWER WINDOW SW → **TERMINAL 7** → **TERMINAL 1** OF THE MASTER SW → **TERMINAL 4** TO **GROUND**. THE MOTOR RUNS TO ASCENT THE WINDOW. RELEASING THIS SW, THE ROTATION OF MOTOR IS STOPPED AND WINDOW CAN STOP AT WILL PLACE. SWITCHING THE WINDOW LOCK SW IN "LOCK" POSITION, THE CIRCUIT IS OPENED AND STOPPED THE MOTOR ROTATION.

R (FOR THE DOWN OPERATION, CURRENT FLOWS IN THE REVERSE DIRECTION BECAUSE THE TERMINALS WHERE IT FLOWS ARE CHANGED).

SERVICE HINTS

P 2 POWER WINDOW CONTROL RELAY

3–GROUND: ALWAYS CONTINUITY

2–GROUND: APPROX. 12 VOLTS WITH THE IGNITION SW AT **ON** POSITION

5–GROUND: APPROX. 12 VOLTS WITH THE IGNITION SW AT **ON** POSITION AND THE MASTER SW AT **UP** POSITION

8–GROUND: APPROX. 12 VOLTS WITH THE IGNITION SW AT **ON** POSITION AND THE MASTER SW AT **AUTO DOWN** POSITION

9–GROUND: APPROX. 12 VOLTS WITH THE IGNITION SW AT **ON** POSITION AND THE MASTER SW AT **DOWN** OR **AUTO DOWN** POSITION

P 4 POWER WINDOW MASTER SW

4–GROUND: ALWAYS CONTINUITY

3–GROUND: APPROX. 12 VOLTS WITH THE IGNITION SW AT **ON** POSITION

WINDOW LOCK SW

OPEN WITH THE WINDOW LOCK SW AT **LOCK** POSITION

S

: PARTS LOCATION

CODE	SEE PAGE	CODE	SEE PAGE	CODE	SEE PAGE
P2	21	**P4**	21	**P6**	21
P3	21	**P5**	21		

T

: RELAY BLOCKS

CODE	SEE PAGE	
1	16	R/B NO. 1 (INSTRUMENT PANEL LEFT)

U

: JUNCTION BLOCK AND WIRE HARNESS CONNECTOR

CODE	SEE PAGE	
38	14	J/B NO. 3 AND COWL WIRE (INSTRUMENT PANEL LEFT SIDE)

V

: CONNECTOR JOINING WIRE HARNESS AND WIRE HARNESS

CODE	SEE PAGE	
ID1	26	FRONT DOOR RH WIRE AND COWL WIRE (RIGHT KICK PANEL)
IH1	26	FRONT DOOR LH WIRE AND COWL WIRE (LEFT KICK PANEL)

W

: GROUND POINTS

CODE	SEE PAGE	
IC	24	COWL LEFT

X

: SPLICE POINTS

CODE	SEE PAGE	WIRE HARNESS WITH SPLICE POINTS	CODE	SEE PAGE	WIRE HARNESS WITH SPLICE POINTS
I 5	24	COWL WIRE			

Ⓠ: Explains the system outline.

Ⓡ: Indicates values or explain the function for reference during troubleshooting.

Ⓢ: Indicates the reference page showing the position on the vehicle of the parts in the system circuit.

Example: Part “P 4” (Power Window Master SW) is on page 21 of the manual.

* The letter in the code is from the first letter of the part, and the number indicates its order in parts starting with the letter.

Example: P 4

Part is 4th in order

Power Window Master SW

Ⓣ: Indicates the reference page showing the position on the vehicle of Relay Block Connectors in the system circuit.

Example: Connector “1” is described on page 16 on this manual and is installed on the left side of the instrument panel.

Ⓤ: Indicates the reference page showing the position on the vehicle of J/B and Wire Harness in the system circuit.

Example: Connector “3B”connects the Cowl Wire and J/B No. 3. It is described on page 14 of this manual, and is installed on the instrument panel left side.

Ⓥ: Indicates the reference page describing the wiring harness and wiring harness connector (the female wiring harness is shown first, followed by the male wiring harness).

Example: Connector “ID1”connects the front door RH wire (female) and cowl wire (male). It is described on page 26 of this manual, and is installed on the right side kick panel.

Ⓦ: Indicates the reference page showing the position of the ground points on the vehicle.

Example: Ground point “IC” is described on page 24 of this manual and is installed on the cowl left side.

Ⓧ: Indicates the reference page showing the position of the splice points on the vehicle.

Example: Splice point “I 5” is on the Cowl Wire Harness and is described on page 24 of this manual.

HINTS:

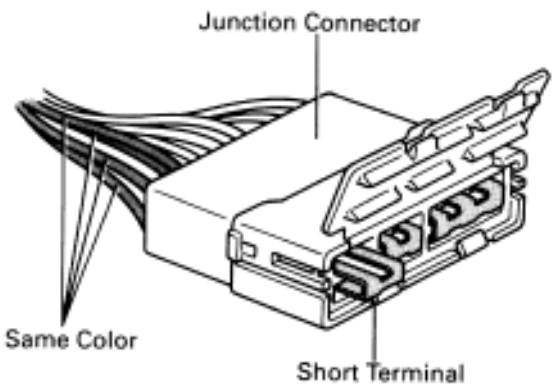

Junction connector (code: J1 to J19) in this manual include a short terminal which is connected to a number of wire harnesses. Always perform inspection with the short terminal installed. (When installing the wire harnesses, the harnesses can be connected to any position within the short terminal grouping. Accordingly, in other vehicles, the same position in the short terminal may be connected to a wire harness from a different part.)
Wire harness sharing the same short terminal grouping have the same color.

B HOW TO USE THIS MANUAL

The “Current Flow Chart” section, describes which parts each power source (fuses, fusible links, and circuit breakers) transmits current to. In the Power Source circuit diagram, the conditions when battery power is supplied to each system are explained. Since all System Circuit diagrams start from the power source, the power source system must be fully understood.

H POWER SOURCE (CURRENT FLOW CHART)

The chart below shows the route by which current flows from the battery to each electrical source (Fusible Link, Circuit Breaker, Fuse, etc.) and other parts.

The next page and following pages shown the parts to which each electrical source outputs current.

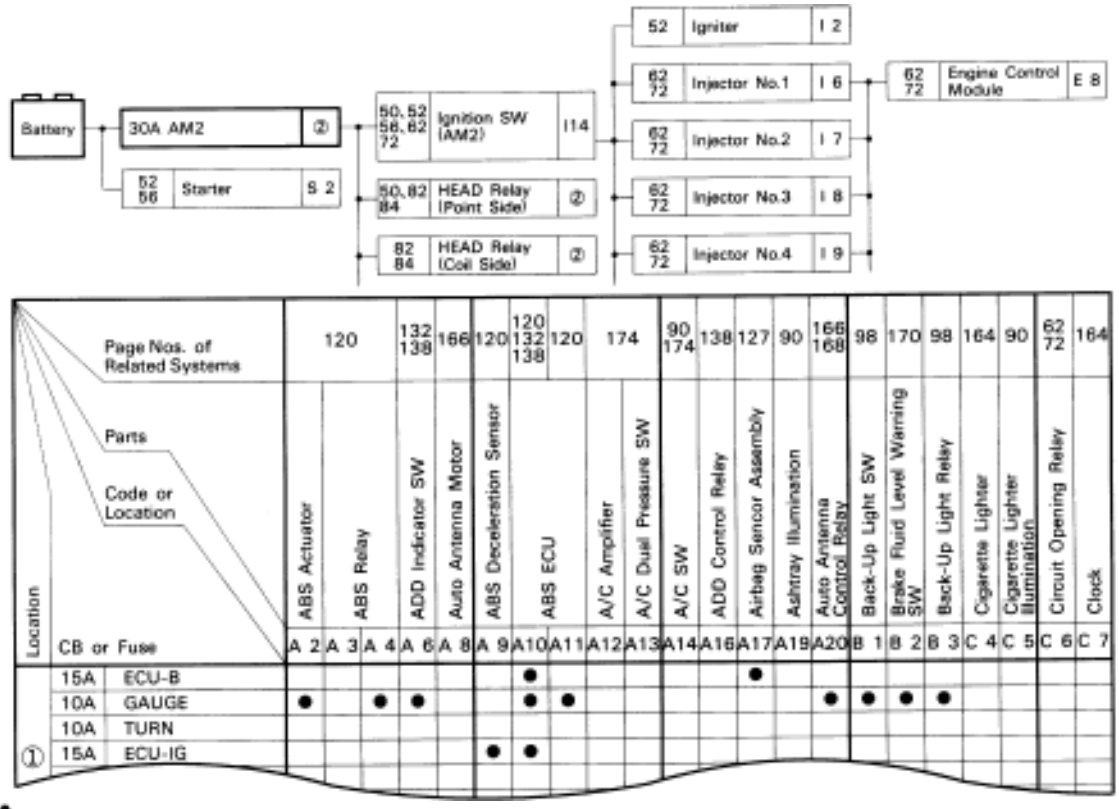

POWER SOURCE

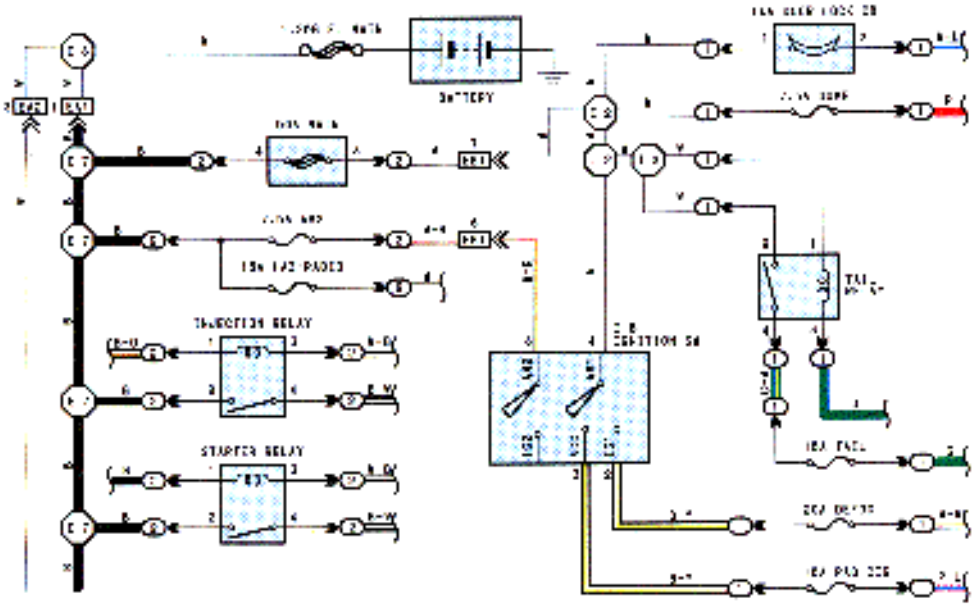

* The system shown here is an EXAMPLE ONLY. It is different to the actual circuit shown in the SYSTEM CIRCUITS SECTION.

The ground points circuit diagram shows the connections from all major parts to the respective ground points. When troubleshooting a faulty ground point, checking the system circuits which use a common ground may help you identify the problem ground quickly. The relationship between ground points (EA, IB and IC shown below) can also be checked this way.

J GROUND POINT

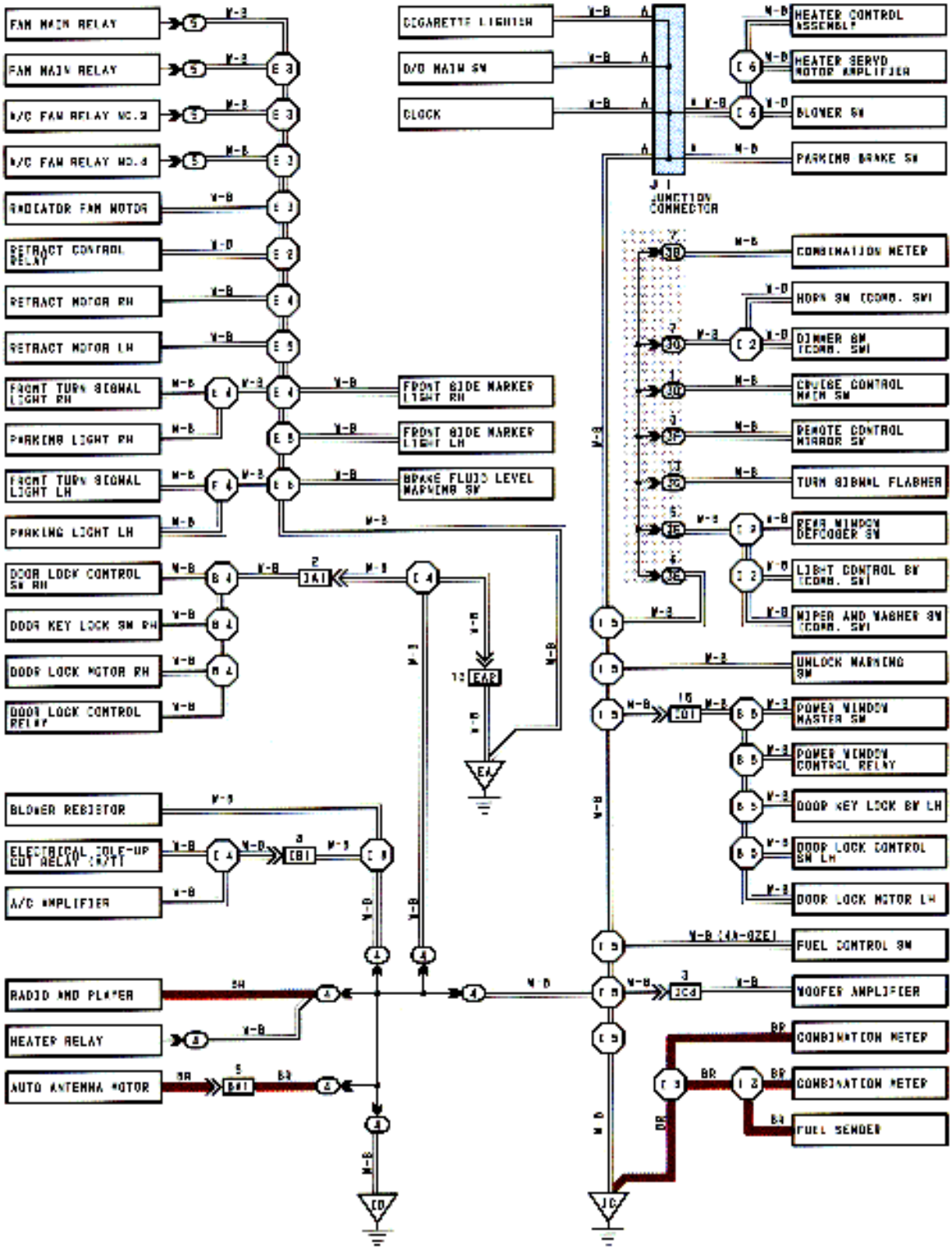

* The system shown here is an EXAMPLE ONLY. It is different to the actual circuit shown in the SYSTEM CIRCUITS SECTION.

A INTRODUCTION

This manual consists of the following 11 sections:

No.	Section	Description
A	INDEX	Index of the contents of this manual.
	INTRODUCTION	Brief explanation of each section.
B	HOW TO USE THIS MANUAL	Instructions on how to use this manual.
C	TROUBLE–SHOOTING	Describes the basic inspection procedures for electrical circuits.
D	ABBREVIATIONS	Defines the abbreviations used in this manual.
E	GLOSSARY OF TERMS AND SYMBOLS	Defines the symbols and functions of major parts.
F	RELAY LOCATIONS	Shows position of the Electronic Control Unit, Relays, Relay Block, etc. This section is closely related to the system circuit.
G	ELECTRICAL WIRING ROUTING	Describes position of Parts Connectors, Splice points, Ground points, etc. This section is closely related to the system circuit.
H	POWER SOURCE (Current Flow Chart)	Describes power distribution from the power supply to various electrical loads.
I	INDEX	Index of the system circuits.
	SYSTEM CIRCUITS	Electrical circuits of each system are shown from the power supply through ground points. Wiring connections and their positions are shown and classified by code according to the connection method. (Refer to the section, “How to use this manual”). The “System Outline” and “Service Hints” useful for troubleshooting are also contained in this section.
J	GROUND POINTS	Shows ground positions of all the parts described in this manual.
K	OVERALL ELECTRICAL WIRING DIAGRAM	Provides circuit diagrams showing the circuit connections.

K OVERALL ELECTRICAL WIRING DIAGRAM

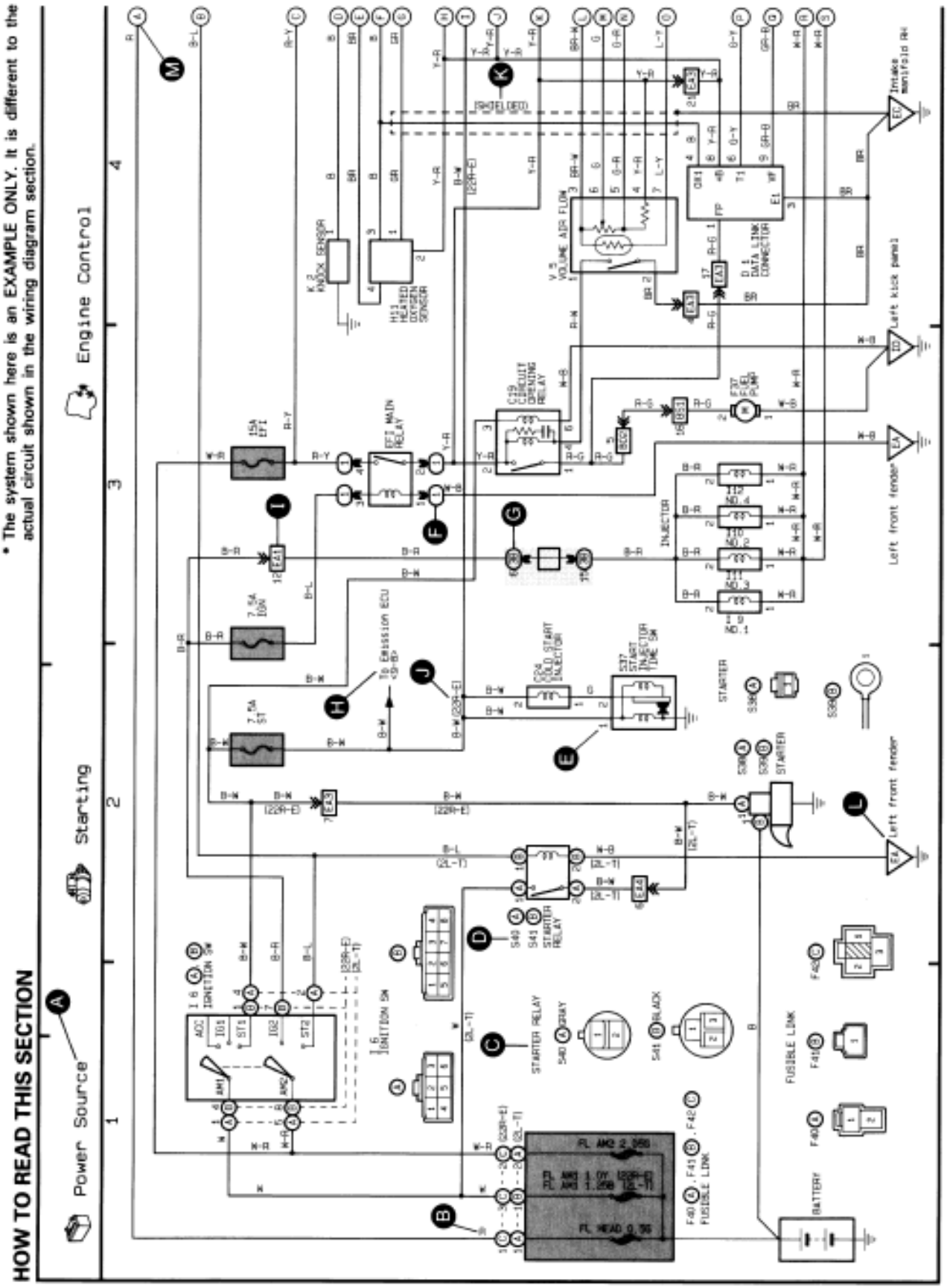

Ⓐ: System Title

Ⓑ: Indicates the wiring color.

Wire colors are indicated by an alphabetical code.

B	= Black	L	= Blue	R	= Red
BR	= Brown	LG	= Light Green	V	= Violet
G	= Green	O	= Orange	W	= White
GR	= Gray	P	= Pink	Y	= Yellow

The first letter indicates the basic wire color and the second letter indicates the color of the stripe.

Example: L – Y

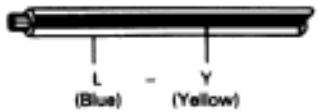

Ⓒ: Indicates the connector to be connected to a part (the numeral indicates the pin No.)

Ⓓ: The position of the parts is the same as shown in the wiring diagram and wire routing.

Ⓔ: Indicates the pin number of the connector. The numbering system is different for female and male connectors.

Example: Numbered in order from upper left to lower right — Numbered in order from upper right to lower left



The numbering system for the overall wiring diagram is the same as above.

Ⓕ: Indicates a Relay Block. No shading is used and only the Relay Block No. is shown to distinguish it from the J/B.

Example: ① Indicates Relay Block No. 1.

Ⓖ: Junction Block (The number in the circle is the J/B No. and the connector code is shown beside it). Junction Blocks are shaded to clearly separate them from other parts (different junction blocks are shaded differently for further clarification).

Example:



3B indicates that it is inside Junction Block No. 3.

Ⓗ: Indicates related system.

Ⓘ: Indicates the wiring harness and wiring harness connector. The wiring harness with male terminal is shown with arrows (≫). Outside numerals are pin numbers.

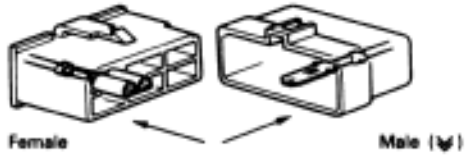

Ⓙ: ( ) is used to indicate different wiring and connector, etc. when the vehicle model, engine type, or specification is different.

Ⓚ: Indicates a shielded cable.



Ⓛ: Indicates and located on ground point.

Ⓜ: The same code occuring on the next page indicates that the wire harness is continuous.

SYSTEM INDEX

1997 Model (Location No.1 to 19)

SYSTEMS	LOCATION
ABS	13-2
Back-Up Light	7-3
Charging	1-4
Cigarette Lighter and Clock	8-2
Combination Meter	18-2
Cruise Control	10-2
Door Lock Control(w/o Theft Deterrent System)	17-2
Electronically Controlled Transmission	11-2
Engine Control	2-2(A/T) 3-2(M/T)
Headlight	4-2(USA, Pueruto Rico) 5-2(Canada)
Horn	8-2
Interior Light	4-3
Key Reminder and Seat Belt Warning	12-2
Light Reminder Buzzer	17-4
Power Source	1-19-1
Power Window	14-2
Radiator Fan and Air Conditioning	19-2
Radio and Player	12-3
Rear Window Defogger	9-3
Shift Lock	10-4
SRS	9-2
Starting and Ignition	1-2
Stop Light	7-4
Taillight and Illumination	6-2
Theft Deterrent (w/o Door Lock Control)	16-2
Theft Deterrent and Door Lock Control	15-2
Turn Signal and Hazard Warning Light	7-2
Wiper and Washer	8-4

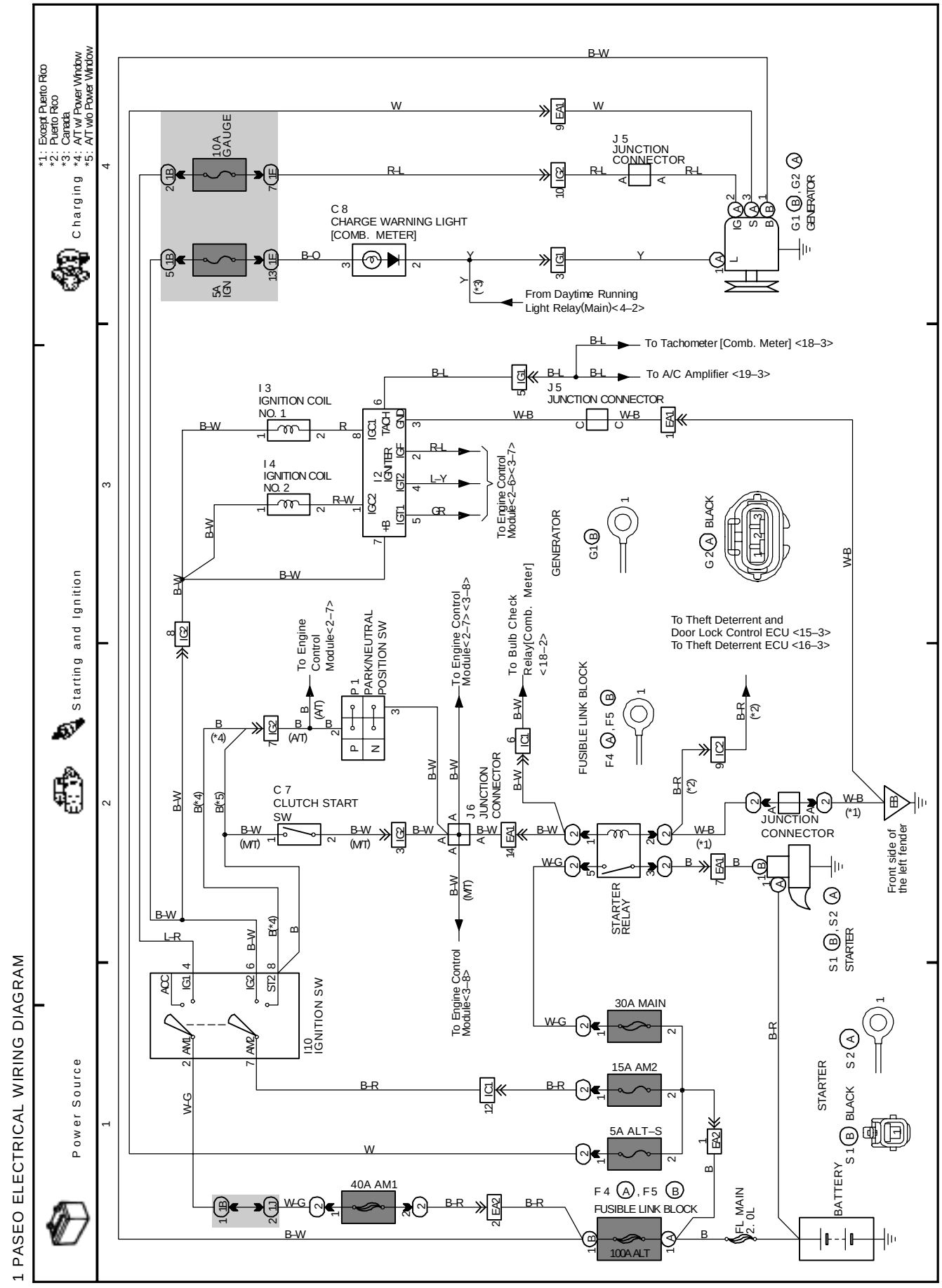
1 PASEO ELECTRICAL WIRING DIAGRAM
Power Source
Starting and Ignition
Charging
*1: Except Puerto Rico
*2: Puerto Rico
*3: Canada
*4: A/T w/ Power Window
*5: A/T w/o Power Window
10A GAUGE
5A IGN
C 8
CHARGE WARNING LIGHT [COMB. METER]
J 5 JUNCTION CONNECTOR
G1 G2 GENERATOR
From Daytime Running Light Relay(Main)<4–2>
To Tachometer [Comb. Meter] <18–3>
To A/C Amplifier <19–3>
I 3 IGNITION COIL NO. 1
I 4 IGNITION COIL NO. 2
I 2 IGNITER
To Engine Control Module<2-6><3-7>
GENERATOR
G2 BLACK
To Theft Deterrent and Door Lock Control ECU <15–3>
To Theft Deterrent ECU <16–3>
To Engine Control Module<2–7>
P 1 PARK/NEUTRAL POSITION SW
To Engine Control Module<2–7><3–8>
To Bulb Check Relay[Comb. Meter] <18–2>
FUSIBLE LINK BLOCK
C 7 CLUTCH START SW
J 6 JUNCTION CONNECTOR
JUNCTION CONNECTOR
Front side of the left fender
STARTER RELAY
S1 S2 STARTER
I10 IGNITION SW
To Engine Control Module<3–8>
30A MAIN
15A AM2
5A ALT–S
40A AM1
100A ALT
F4 , F5
FUSIBLE LINK BLOCK
FL MAIN 2.0L
BATTERY
STARTER
S1 BLACK
S2

K OVERALL ELECTRICAL WIRING DIAGRAM

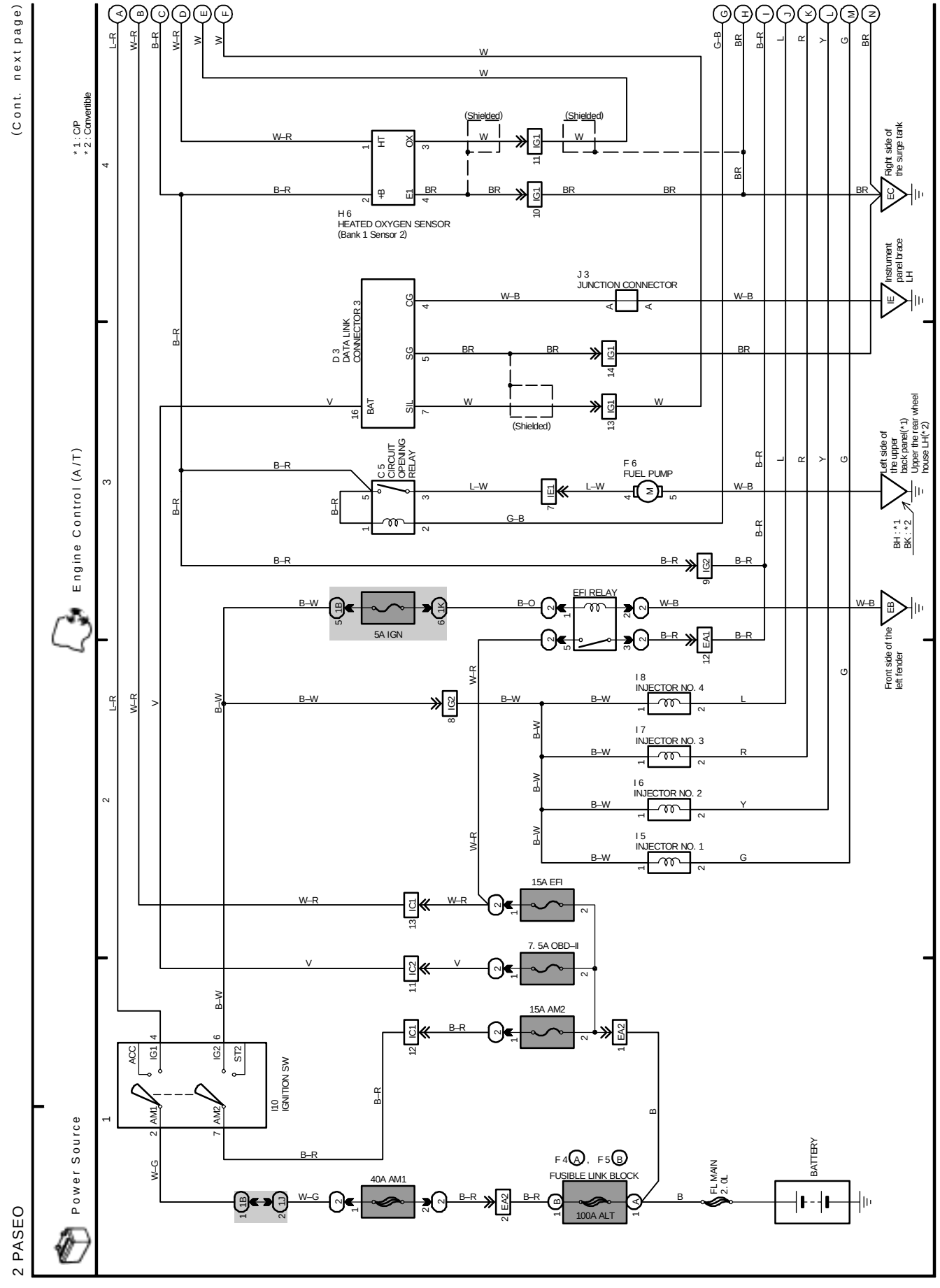

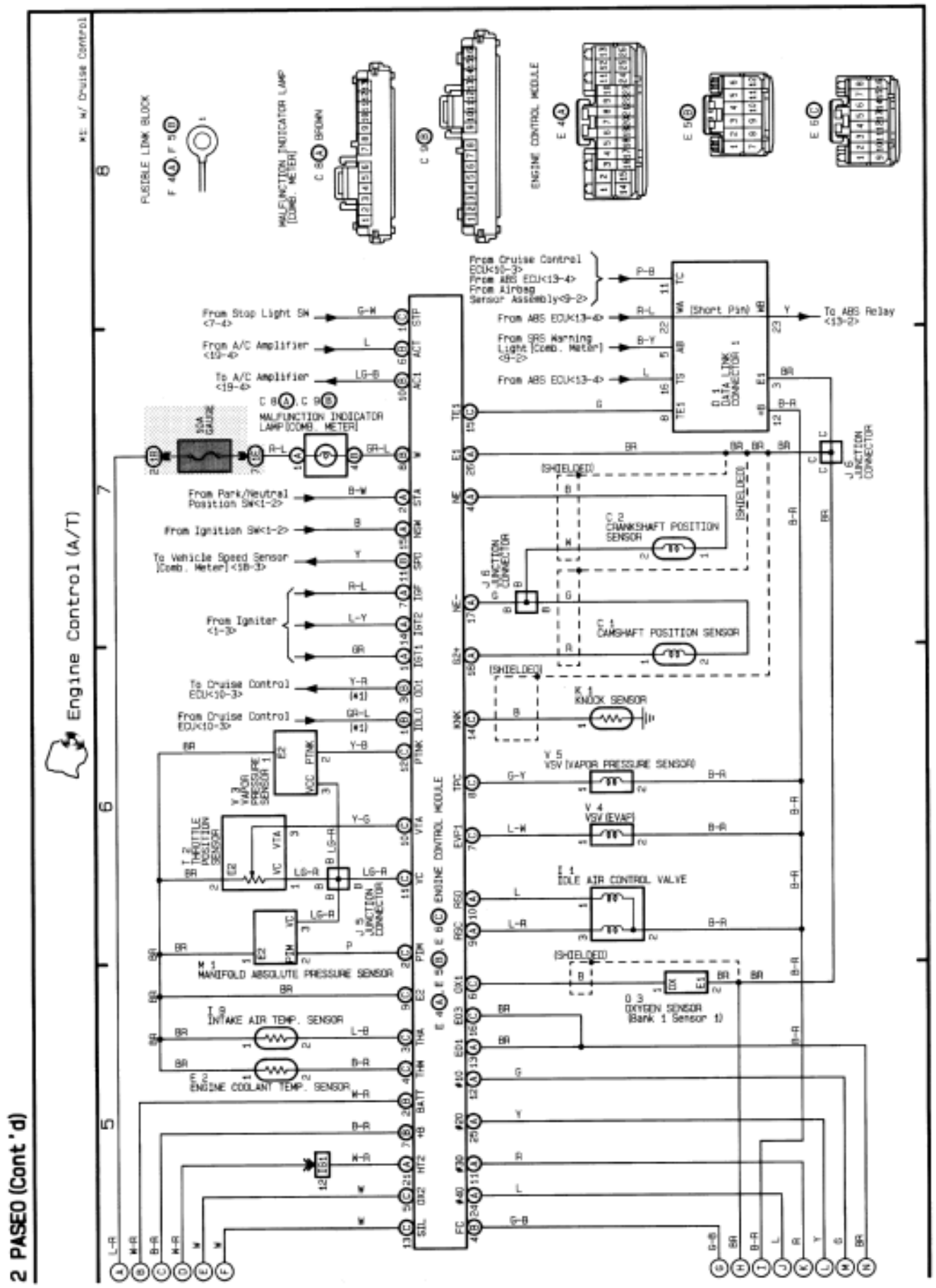
2 PASEO (Cont'd)
Engine Control (A/T)
*E: W/ Cruise Control
FUSIBLE LINK BLOCK
MALFUNCTION INDICATOR LAMP [COMB. METER]
ENGINE CONTROL MODULE
From Cruise Control ECU<10-3>
From ABS ECU<13-4>
From Airbag Sensor Assembly<9-2>
From ABS ECU<13-4>
From SRS Warning Light [Comb. Meter] <9-2>
From ABS ECU<13-4>
To ABS Relay <13-2>
D 1 DATA LINK CONNECTOR 1
J 6 JUNCTION CONNECTOR
From Stop Light SW <7-4>
From A/C Amplifier <19-4>
To A/C Amplifier <19-4>
C 8, C 9
MALFUNCTION INDICATOR LAMP [COMB. METER]
10A GAUGE
From Park/Neutral Position SW<1-2>
From Ignition SW<1-2>
To Vehicle Speed Sensor [Comb. Meter] <18-3>
From Igniter <1-3>
To Cruise Control ECU<10-3>
From Cruise Control ECU<10-3>
C 2 CRANKSHAFT POSITION SENSOR
C 1 CAMSHAFT POSITION SENSOR
K 1 KNOCK SENSOR
V 5 VSV (VAPOR PRESSURE SENSOR)
V 4 VSV (EVAP)
I 1 IDLE AIR CONTROL VALVE
V 3 VAPOR PRESSURE SENSOR 1
T 2 THROTTLE POSITION SENSOR
J 5 JUNCTION CONNECTOR
M 1 MANIFOLD ABSOLUTE PRESSURE SENSOR
I 3 INTAKE AIR TEMP. SENSOR
E 2 ENGINE COOLANT TEMP. SENSOR
O 3 OXYGEN SENSOR (Bank 1 Sensor 1)
[SHIELDED]
E 4, E 5, E 6 ENGINE CONTROL MODULE

K OVERALL ELECTRICAL WIRING DIAGRAM

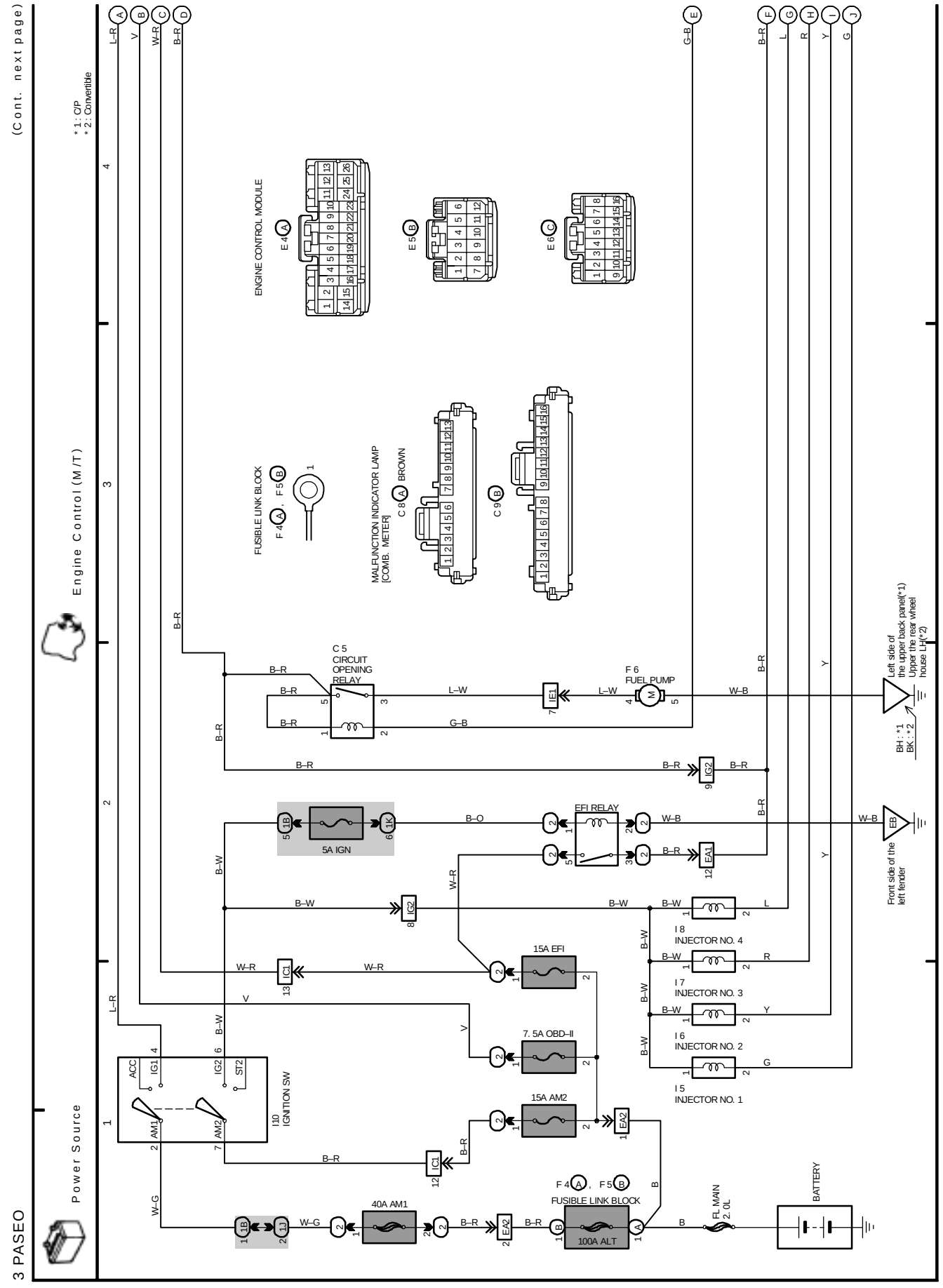

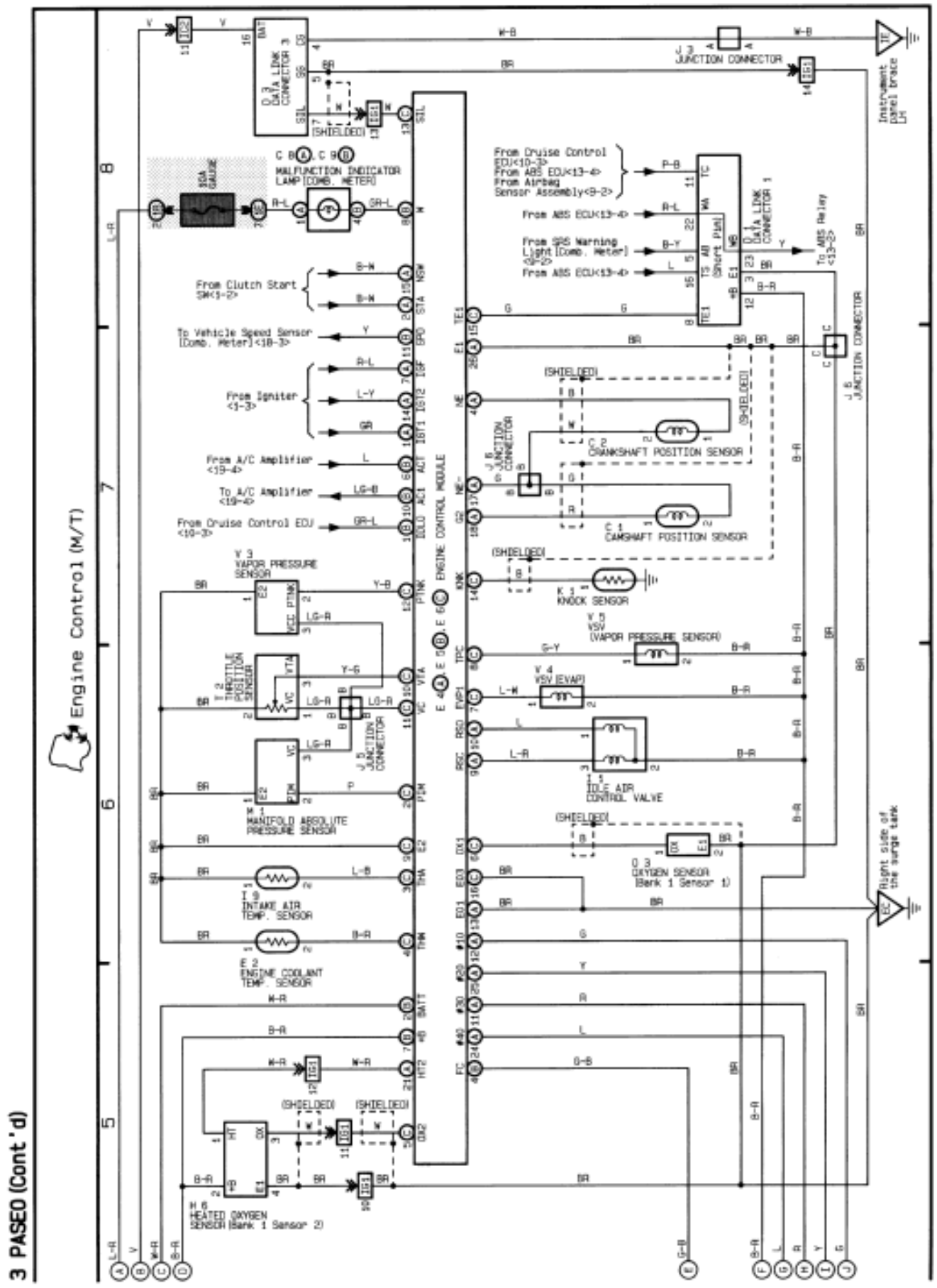
3 PASEO (Cont'd)
Engine Control (M/T)
ENGINE CONTROL MODULE
DATA LINK CONNECTOR 3
DATA LINK CONNECTOR 1
JUNCTION CONNECTOR
MALFUNCTION INDICATOR LAMP [COMB. METER]
SRS GAUGE
From Clutch Start SW<5-2>
To Vehicle Speed Sensor [Comb. Meter]<10-3>
From Igniter <1-3>
From A/C Amplifier <19-4>
To A/C Amplifier <19-4>
From Cruise Control ECU <10-3>
From Cruise Control ECU<10-3>
From ABS ECU<13-4>
From Airbag Sensor Assembly<9-2>
From SRS Warning Light [Comb. Meter] <9-2>
To ABS Relay <13-2>
V 3 VAPOR PRESSURE SENSOR
THROTTLE POSITION SENSOR
M 1 MANIFOLD ABSOLUTE PRESSURE SENSOR
T 9 INTAKE AIR TEMP. SENSOR
E 2 ENGINE COOLANT TEMP. SENSOR
H 6 HEATED OXYGEN SENSOR (Bank 1 Sensor 2)
C 2 CRANKSHAFT POSITION SENSOR
C 1 CAMSHAFT POSITION SENSOR
K 1 KNOCK SENSOR
V 5 VSV (VAPOR PRESSURE SENSOR)
V 4 VSV (EVAP)
I 1 IDLE AIR CONTROL VALVE
O 3 OXYGEN SENSOR (Bank 1 Sensor 1)
(SHIELDED)
Instrument panel brace LH
Right side of the surge tank
8
7
6
5

K OVERALL ELECTRICAL WIRING DIAGRAM

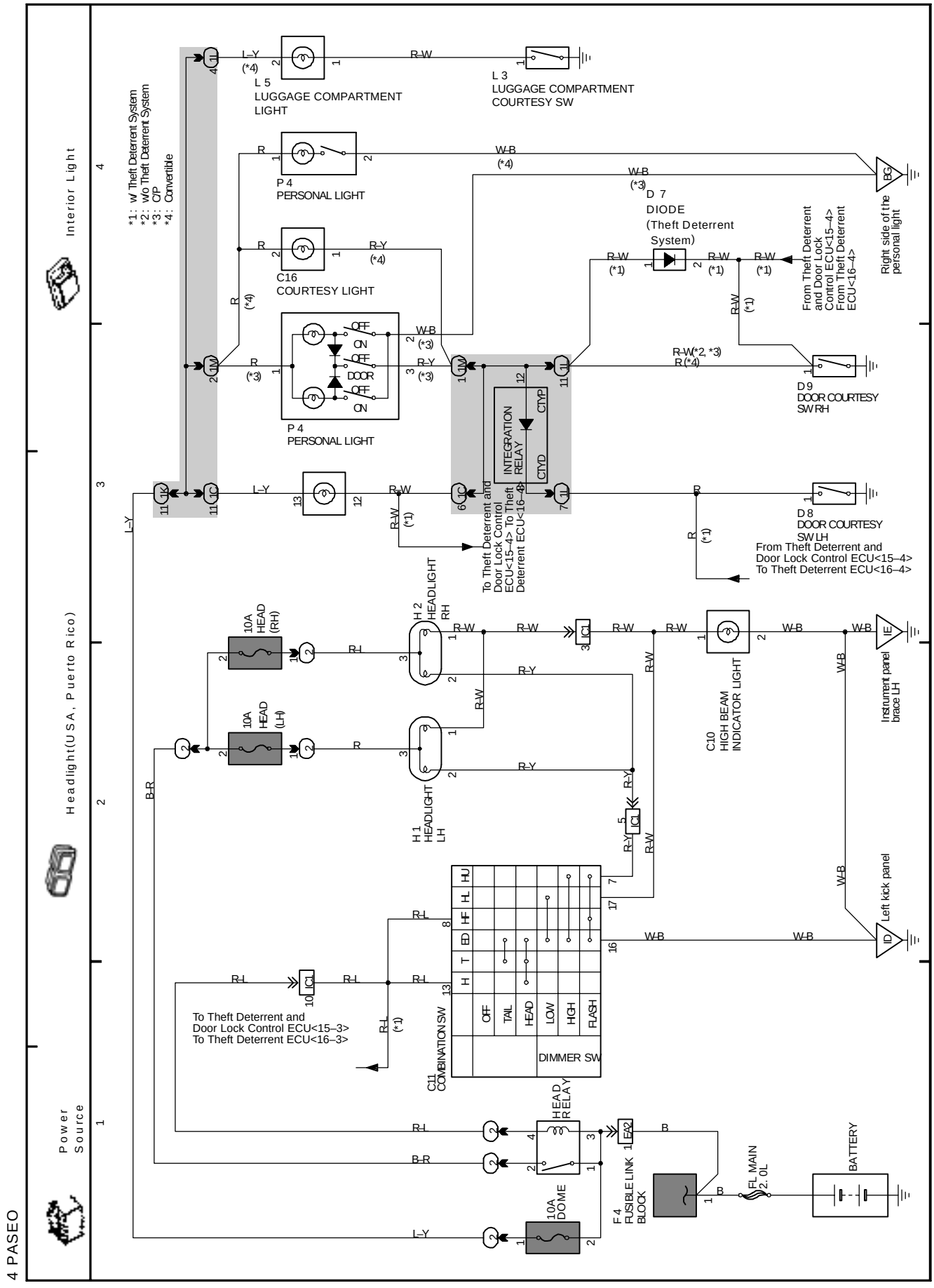

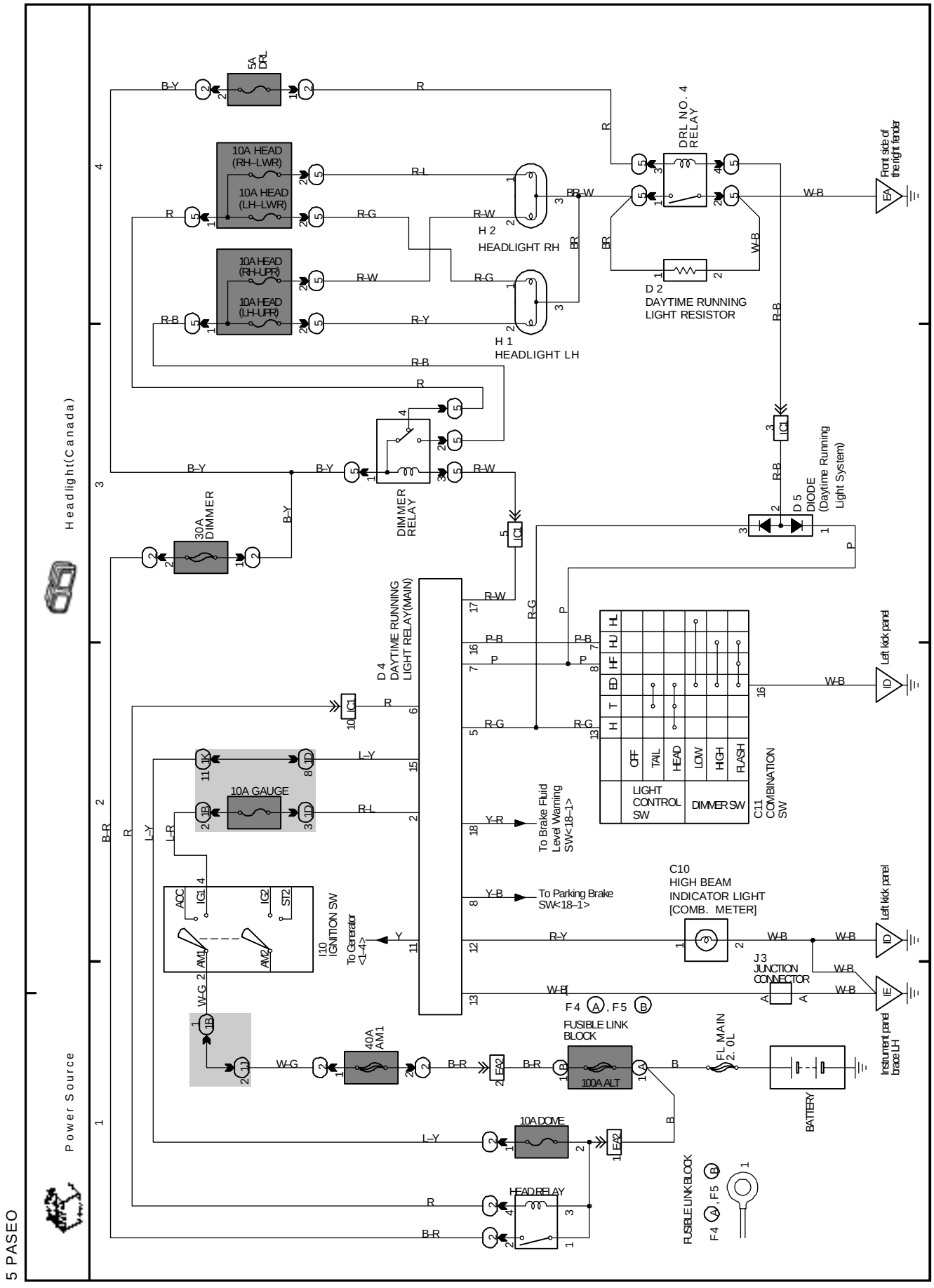
5 PASEO
Power Source
Headlight(Canada)
5A DRL
10A HEAD (RH–LWR)
10A HEAD (LH–LWR)
10A HEAD (RH–UPR)
10A HEAD (LH–UPR)
H 2 HEADLIGHT RH
H 1 HEADLIGHT LH
DRL NO. 4 RELAY
D 2 DAYTIME RUNNING LIGHT RESISTOR
Front side of the right fender
30A DIMMER
DIMMER RELAY
D 5 DIODE (Daytime Running Light System)
D 4 DAYTIME RUNNING LIGHT RELAY(MAIN)
10A GAUGE
I10 IGNITION SW
To Generator <1-4>
To Brake Fluid Level Warning SW<18–1>
To Parking Brake SW<18–1>
C10 HIGH BEAM INDICATOR LIGHT [COMB. METER]
C11 COMBINATION SW
LIGHT CONTROL SW
DIMMER SW
OFF
TAIL
HEAD
LOW
HIGH
FLASH
Left kick panel
J3 JUNCTION CONNECTOR
F4 (A), F5 (B)
FUSIBLE LINK BLOCK
40A AM1
100A ALT
FL MAIN 2.0L
BATTERY
Instrument panel brace LH
10A DOME
HEAD RELAY
FUSIBLE LINK BLOCK
F4 (A), F5 (B)

K OVERALL ELECTRICAL WIRING DIAGRAM

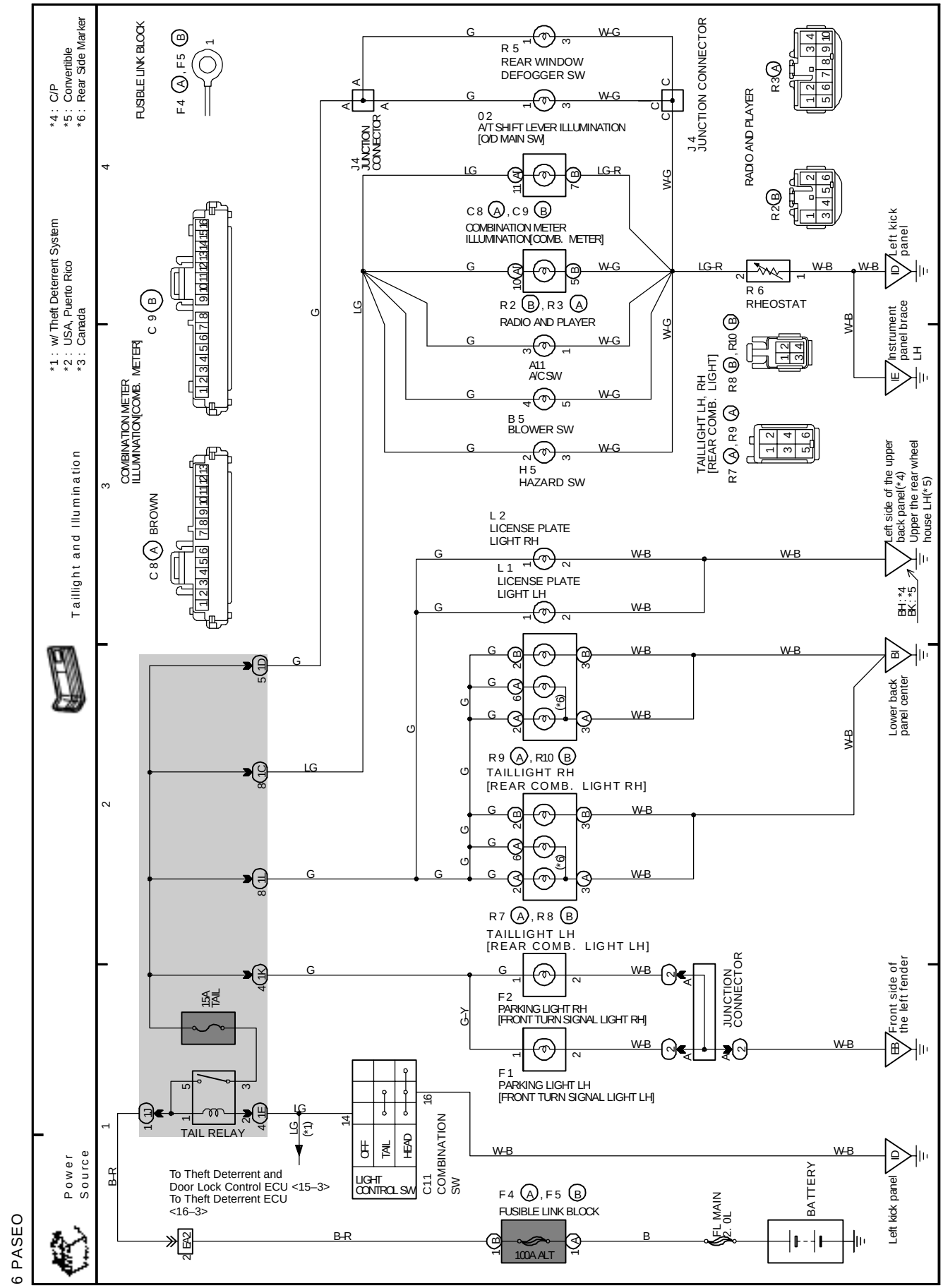

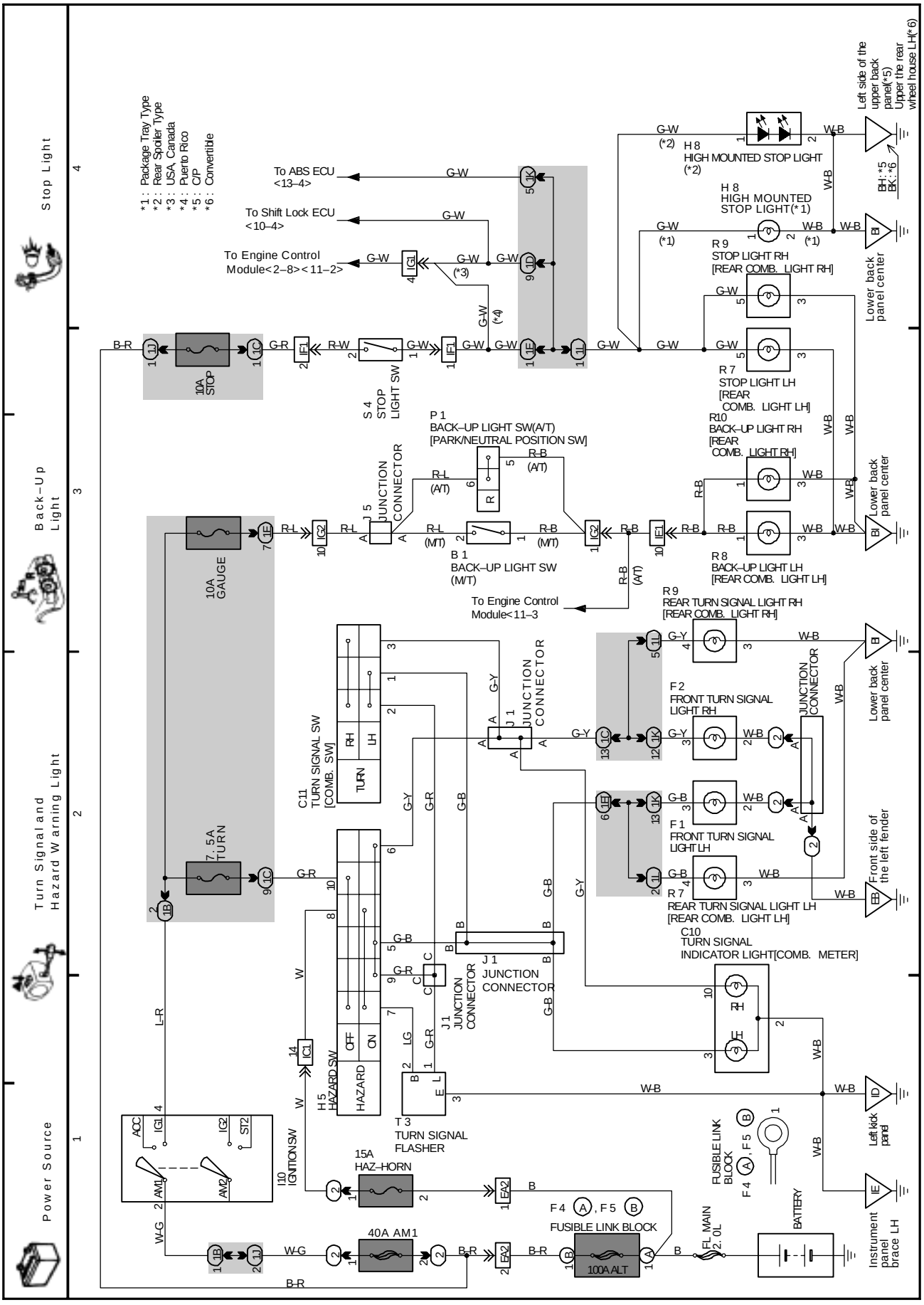
Power Source
Turn Signal and Hazard Warning Light
Back–Up Light
Stop Light
*1 : Package Tray Type
*2 : Rear Spoiler Type
*3 : USA, Canada
*4 : Puerto Rico
*5 : C/P
*6 : Convertible
To ABS ECU <13–4>
To Shift Lock ECU <10–4>
To Engine Control Module<2–8><11–2>
To Engine Control Module<11–3
H 8 HIGH MOUNTED STOP LIGHT (*2)
H 8 HIGH MOUNTED STOP LIGHT(*1)
Left side of the upper back panel(*5) Upper the rear wheel house LH(*6)
BH: *5 BK: *6
R 9 STOP LIGHT RH [REAR COMB. LIGHT RH]
R 7 STOP LIGHT LH [REAR COMB. LIGHT LH]
R10 BACK–UP LIGHT RH [REAR COMB. LIGHT RH]
R 8 BACK–UP LIGHT LH [REAR COMB. LIGHT LH]
Lower back panel center
10A STOP
S 4 STOP LIGHT SW
P 1 BACK–UP LIGHT SW(A/T) [PARK/NEUTRAL POSITION SW]
J 5 JUNCTION CONNECTOR
B 1 BACK–UP LIGHT SW (M/T)
10A GAUGE
7.5A TURN
C11 TURN SIGNAL SW [COMB. SW]
R 9 REAR TURN SIGNAL LIGHT RH [REAR COMB. LIGHT RH]
F 2 FRONT TURN SIGNAL LIGHT RH
F 1 FRONT TURN SIGNAL LIGHT LH
R 7 REAR TURN SIGNAL LIGHT LH [REAR COMB. LIGHT LH]
C10 TURN SIGNAL INDICATOR LIGHT[COMB. METER]
J 1 JUNCTION CONNECTOR
H 5 HAZARD SW
T 3 TURN SIGNAL FLASHER
I10 IGNITION SW
15A HAZ–HORN
40A AM1
100A ALT
FUSIBLE LINK BLOCK
F4 (A), F5 (B)
F4 (A), F5 (B) FUSIBLE LINK BLOCK
BATTERY
2.0L MAIN
Front side of the left fender
Left kick panel
Instrument panel brace LH

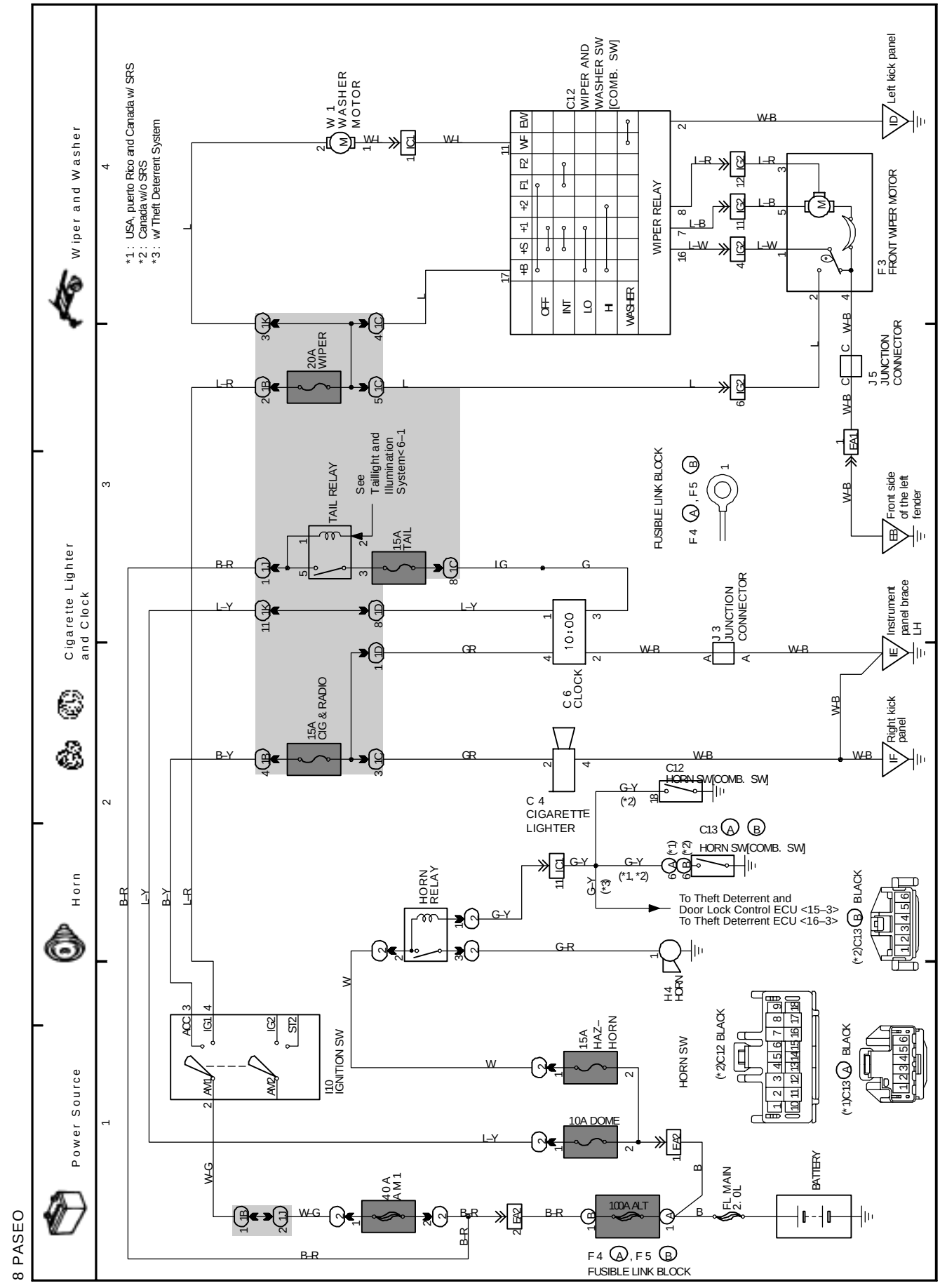
8 PASEO
Power Source
Horn
Cigarette Lighter and Clock
Wiper and Washer
*1 : USA, puerto Rico and Canada w/ SRS
*2 : Canada w/o SRS
*3 : w/ Theft Deterrent System
W 1 WASHER MOTOR
C12 WIPER AND WASHER SW [COMB. SW]
WIPER RELAY
F 3 FRONT WIPER MOTOR
Left kick panel
J 5 JUNCTION CONNECTOR
20A WIPER
TAIL RELAY
See Taillight and Illumination System< 6–1
15A TAIL
15A CIG & RADIO
FUSIBLE LINK BLOCK
F 4 , F 5
Front side of the left fender
J 3 JUNCTION CONNECTOR
Instrument panel brace LH
C 6 CLOCK
Right kick panel
C 4 CIGARETTE LIGHTER
C12 HORN SW [COMB. SW]
C13
HORN SW [COMB. SW]
HORN RELAY
To Theft Deterrent and Door Lock Control ECU <15–3>
To Theft Deterrent ECU <16–3>
(*2)C13 BLACK
H 4 HORN
I10 IGNITION SW
15A HAZ–HORN
HORN SW
(*2)C12 BLACK
(*1)C13 BLACK
10A DOME
40A AM1
100A ALT
2.0L MAIN
BATTERY
F4 , F5
FUSIBLE LINK BLOCK

9 PASEO

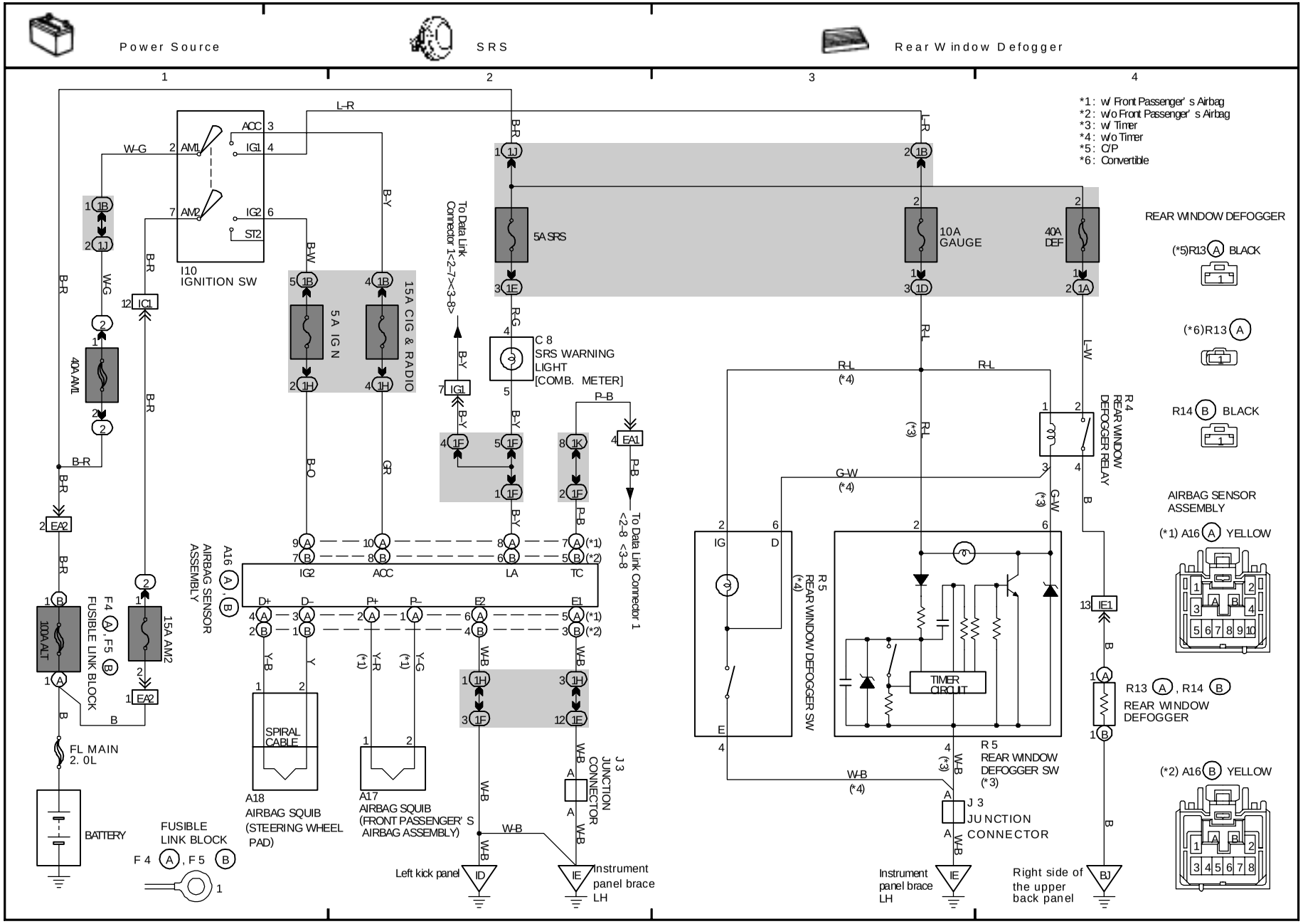
Power Source
SRS
Rear Window Defogger
*1: w/ Front Passenger's Airbag
*2: w/o Front Passenger's Airbag
*3: w/ Timer
*4: w/o Timer
*5: C/P
*6: Convertible
I10 IGNITION SW
5A SRS
10A GAUGE
40A DEF
5A IGN
15A CIG & RADIO
C 8 SRS WARNING LIGHT [COMB. METER]
To Data Link Connector 1<2-7><3-8>
To Data Link Connector 1 <2-8 <3-8
40A AM1
15A AM2
100A ALT
F4 (A), F5 (B) FUSIBLE LINK BLOCK
FL MAIN 2. 0L
BATTERY
FUSIBLE LINK BLOCK
F 4 (A), F 5 (B)
A16 (A), (B) AIRBAG SENSOR ASSEMBLY
SPIRAL CABLE
A18 AIRBAG SQUIB (STEERING WHEEL PAD)
A17 AIRBAG SQUIB (FRONT PASSENGER'S AIRBAG ASSEMBLY)
J 3 JUNCTION CONNECTOR
Left kick panel
Instrument panel brace LH
R 4 REAR WINDOW DEFOGGER RELAY
R 5 REAR WINDOW DEFOGGER SW (*4)
R 5 REAR WINDOW DEFOGGER SW (*3)
TIMER CIRCUIT
J 3 JUNCTION CONNECTOR
Instrument panel brace LH
Right side of the upper back panel
REAR WINDOW DEFOGGER
(*5)R13 (A) BLACK
(*6)R13 (A)
R14 (B) BLACK
AIRBAG SENSOR ASSEMBLY
(*1) A16 (A) YELLOW
R13 (A), R14 (B) REAR WINDOW DEFOGGER
(*2) A16 (B) YELLOW

K OVERALL ELECTRICAL WIRING DIAGRAM

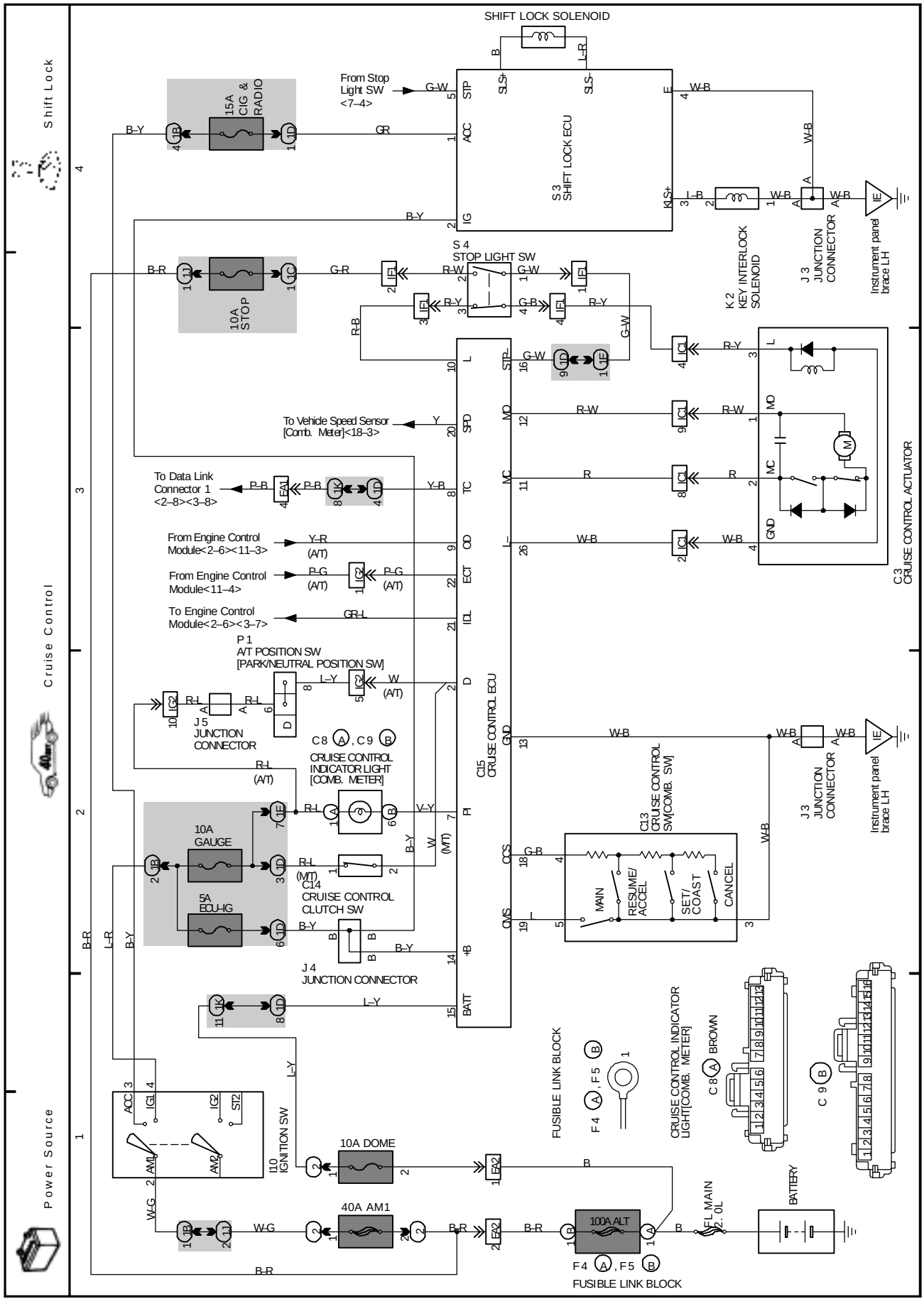

11 PASEO

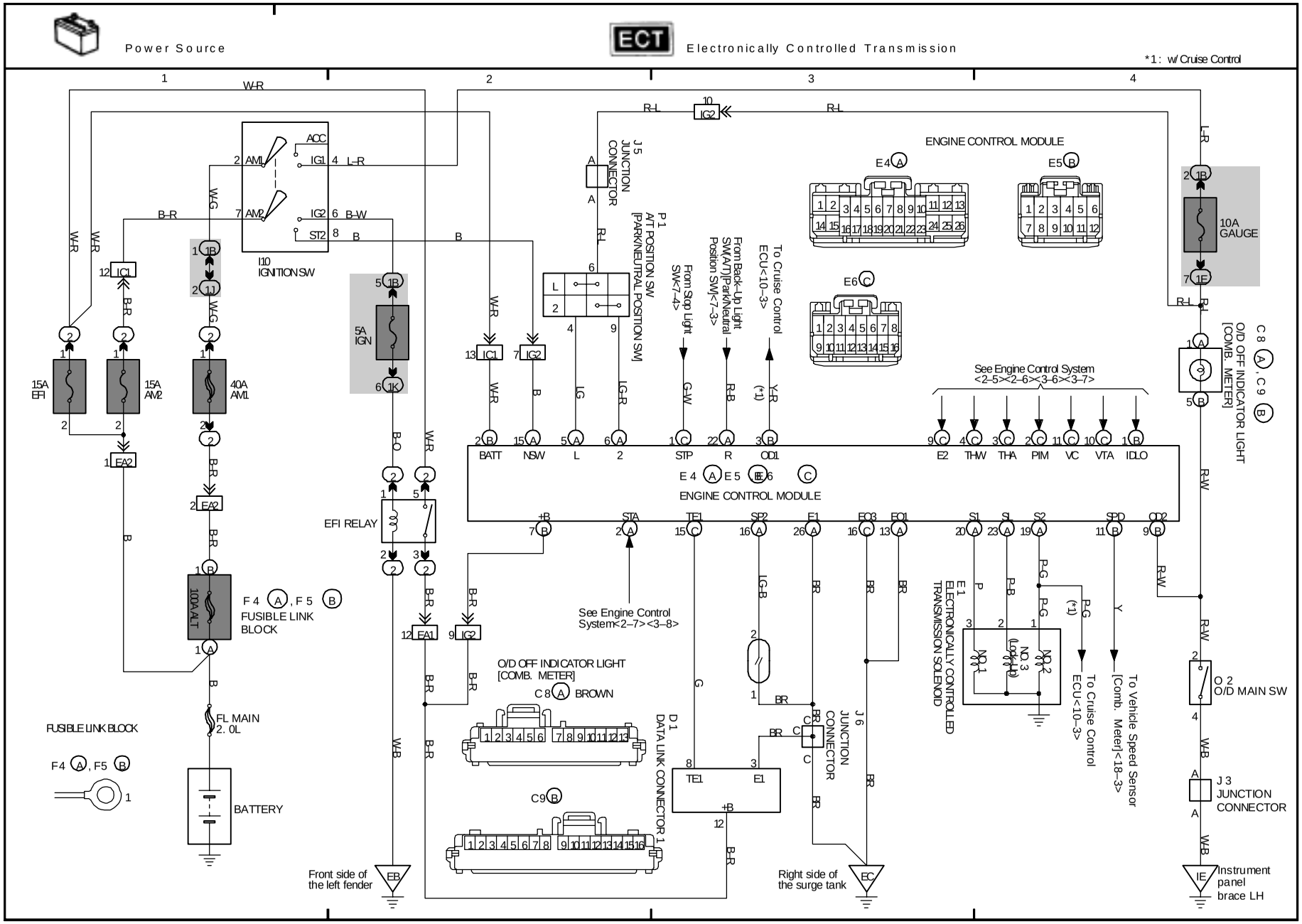
Power Source
ECT
Electronically Controlled Transmission
*1: w/ Cruise Control
ENGINE CONTROL MODULE
E4
E5
E6
J5 JUNCTION CONNECTOR
P1 A/T POSITION SW [PARK/NEUTRAL POSITION SW]
From Stop Light SW<7–4>
From Back-Up Light SW(A/T)[Park/Neutral Position SW]<7–3>
To Cruise Control ECU<10–3>
10A GAUGE
C8, C9 O/D OFF INDICATOR LIGHT [COMB. METER]
See Engine Control System <2–5><2–6><3–6><3–7>
BATT NSW L 2 STP R OD1 E2 THW THA PIM VC VTA IDLO
E4 E5 E6
ENGINE CONTROL MODULE
+B STA TE1 SP2 E1 EO3 EO1 S1 S1 S2 SPD OD2
See Engine Control System<2–7><3–8>
E1 ELECTRONICALLY CONTROLLED TRANSMISSION SOLENOID
NO.1 NO.2 NO.3 (Lock-Up)
To Cruise Control ECU<10–3>
To Vehicle Speed Sensor [Comb. Meter]<18–3>
O2 O/D MAIN SW
J3 JUNCTION CONNECTOR
Instrument panel brace LH
I10 IGNITION SW
ACC IG1 IG2 ST2 AM1 AM2
5A IGN
15A EFI
15A AM2
40A AM1
EFI RELAY
100A ALT
F4, F5 FUSIBLE LINK BLOCK
FL MAIN 2.0L
BATTERY
FUSIBLE LINK BLOCK
F4, F5
O/D OFF INDICATOR LIGHT [COMB. METER]
C8 BROWN
C9
D1 DATA LINK CONNECTOR 1
J6 JUNCTION CONNECTOR
Front side of the left fender
Right side of the surge tank

K OVERALL ELECTRICAL WIRING DIAGRAM

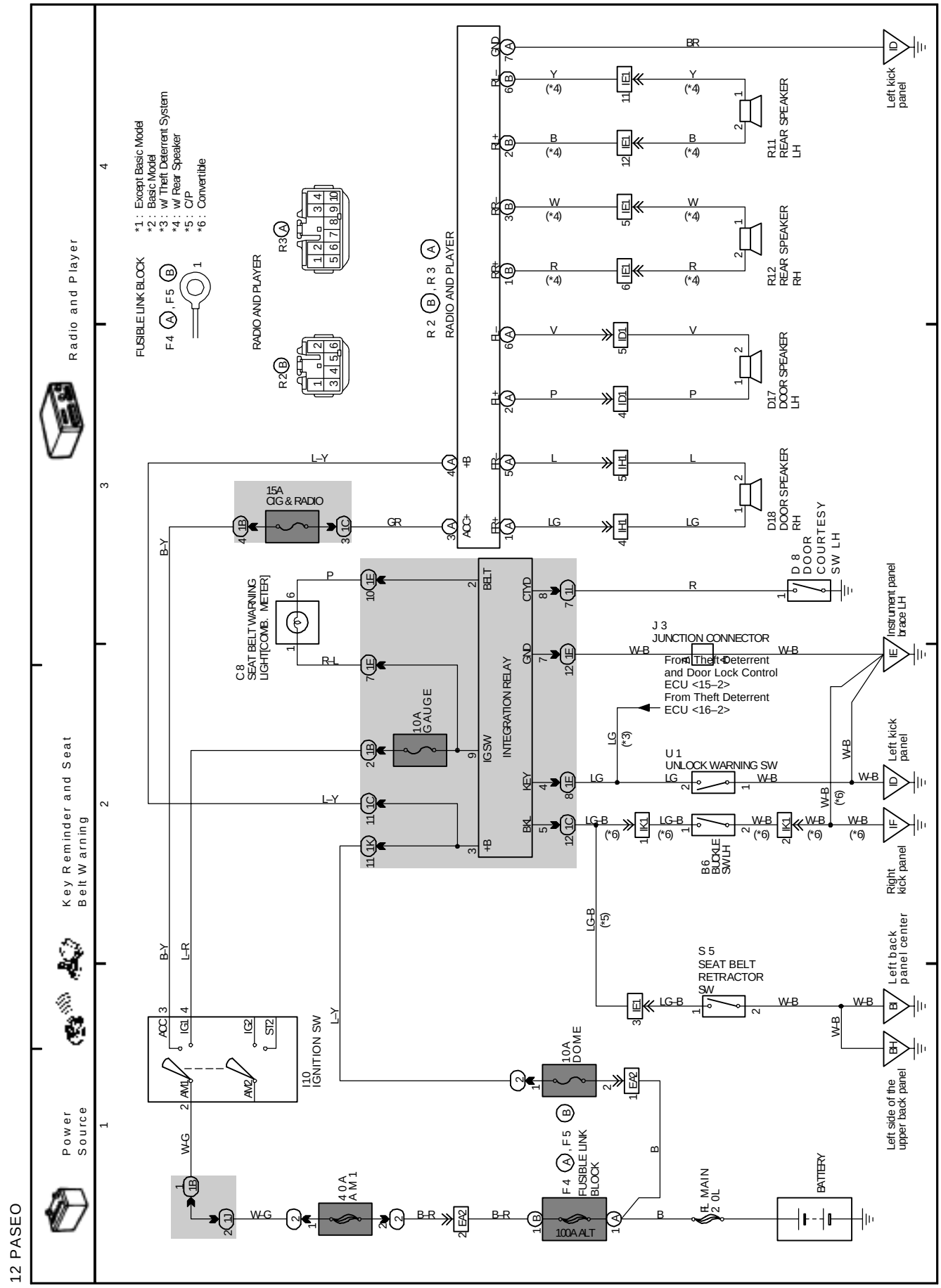

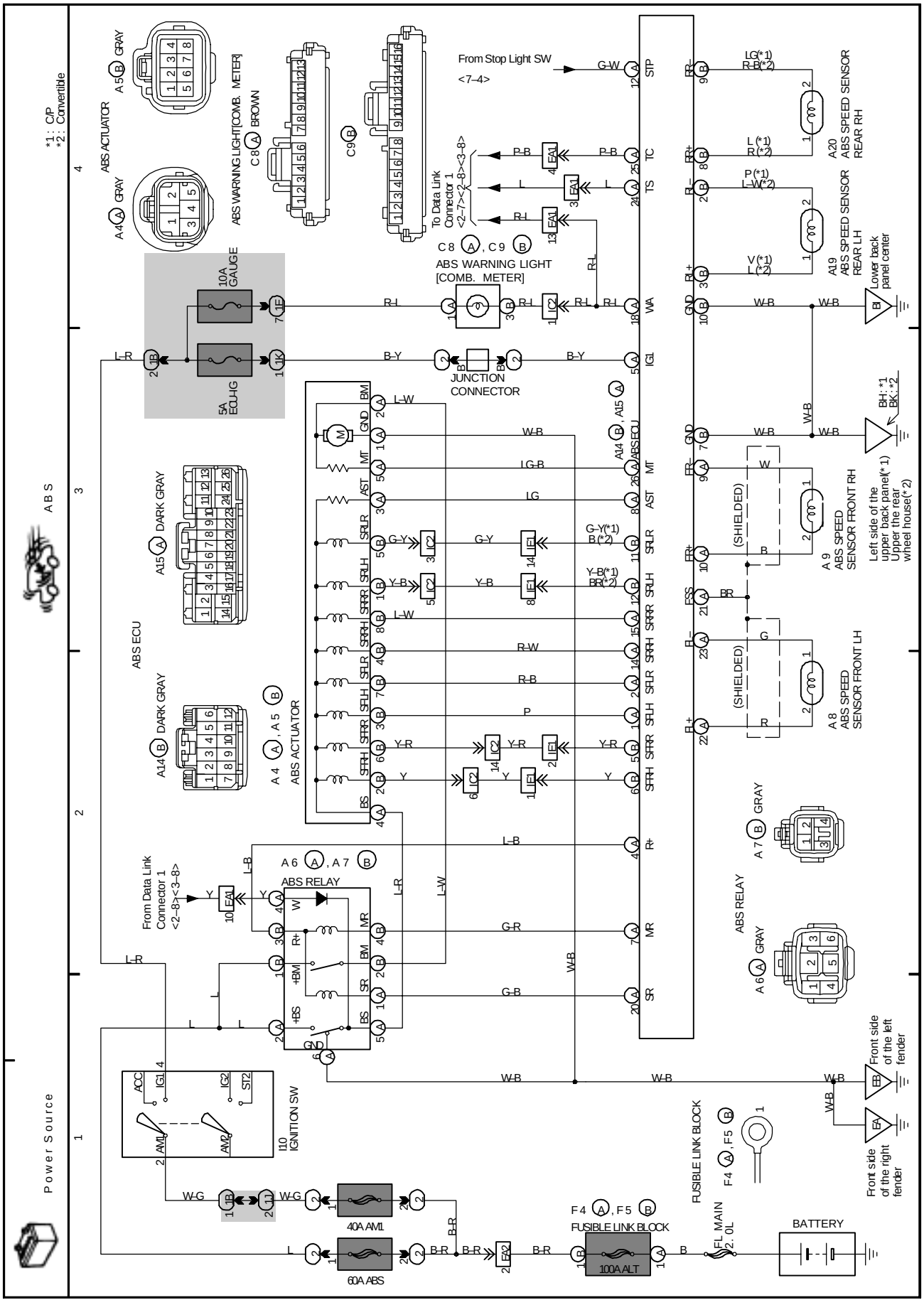
13 PASEO
ABS
Power Source
*1: C/P
*2: Convertible
ABS ACTUATOR
ABS WARNING LIGHT [COMB. METER]
From Stop Light SW
<7–4>
To Data Link Connector 1
<2–7><2–8><3–8>
ABS WARNING LIGHT [COMB. METER]
10A GAUGE
5A ECU-IG
JUNCTION CONNECTOR
ABS ECU
ABS ACTUATOR
From Data Link Connector 1
<2–8><3–8>
ABS RELAY
IGNITION SW
40A AM1
60A ABS
100A ALT
FUSIBLE LINK BLOCK
FL MAIN
BATTERY
ABS SPEED SENSOR FRONT RH
ABS SPEED SENSOR FRONT LH
ABS SPEED SENSOR REAR RH
ABS SPEED SENSOR REAR LH
Left side of the upper back panel(*1) Upper the rear wheel house(*2)
Lower back panel center
Front side of the left fender
Front side of the right fender

K OVERALL ELECTRICAL WIRING DIAGRAM

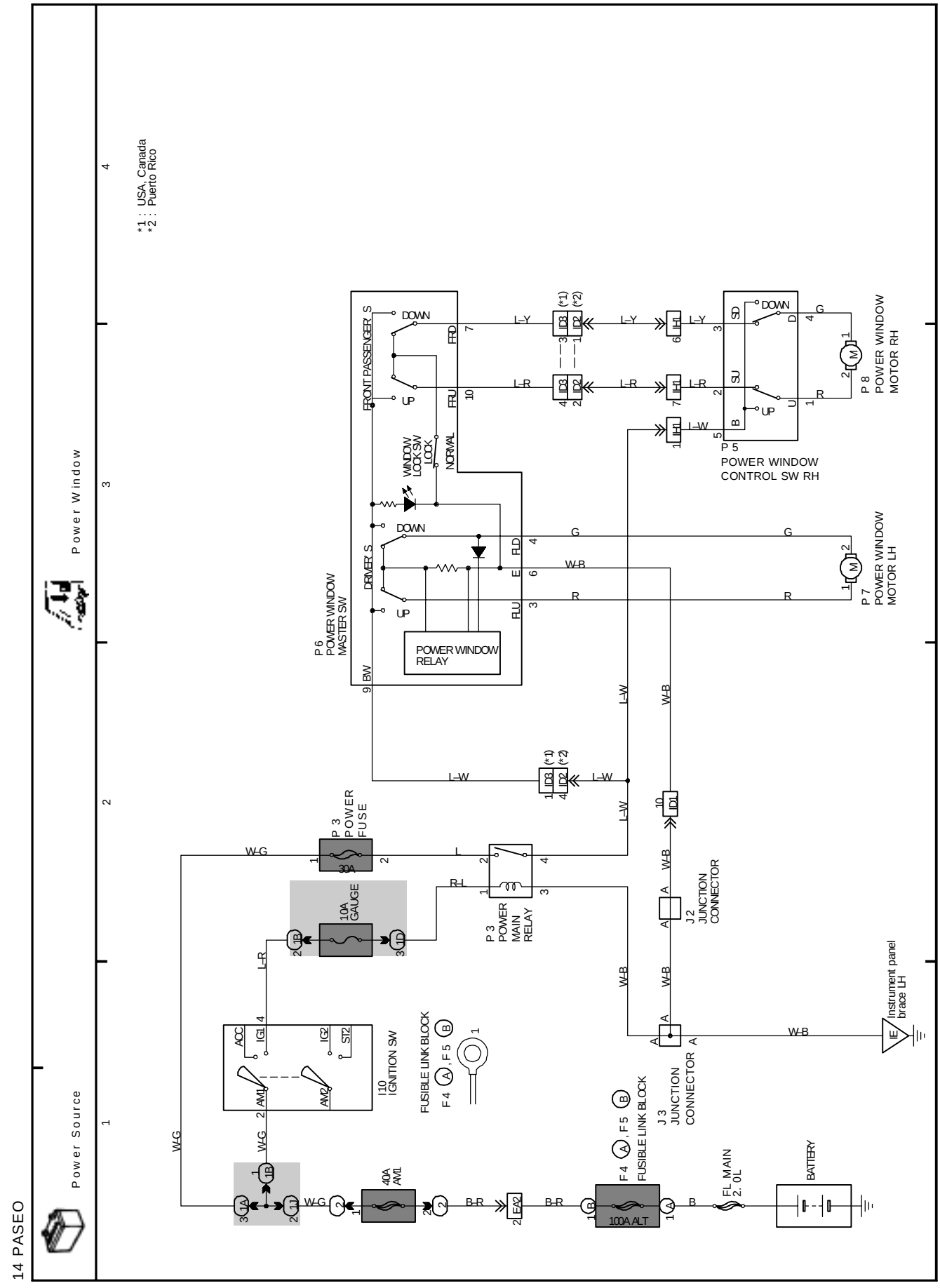

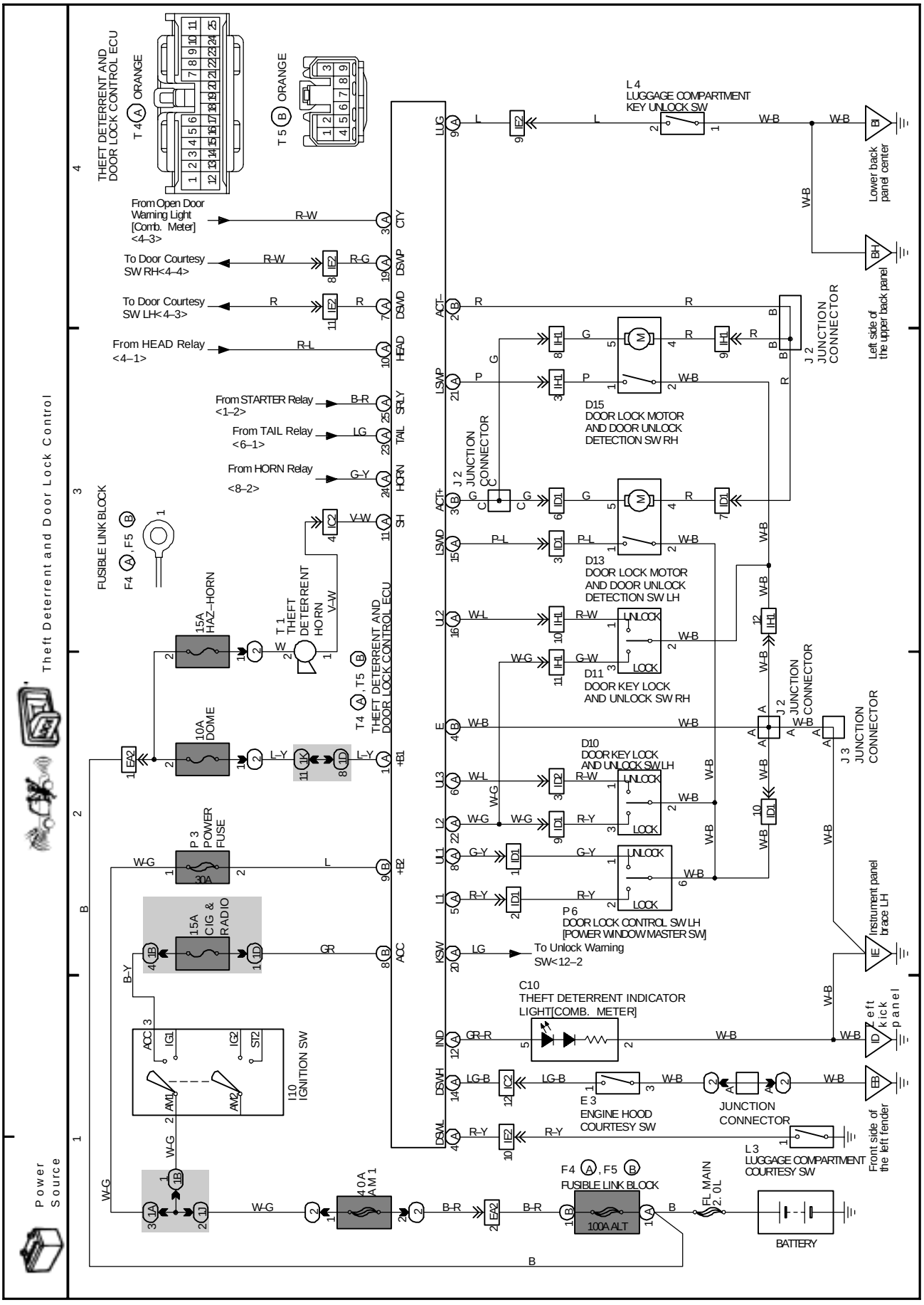
Theft Deterrent and Door Lock Control
Power Source
THEFT DETERRENT AND DOOR LOCK CONTROL ECU
T 4 A ORANGE
T 5 B ORANGE
From Open Door Warning Light [Comb. Meter] <4–3>
To Door Courtesy SW RH<4–4>
To Door Courtesy SW LH<4–3>
From HEAD Relay <4–1>
From STARTER Relay <1–2>
From TAIL Relay <6–1>
From HORN Relay <8–2>
FUSIBLE LINK BLOCK
F4 A, F5 B
15A HAZ–HORN
10A DOME
T 1 THEFT DETERRENT HORN
P 3 POWER FUSE 30A
15A CIG & RADIO
I10 IGNITION SW
40A AM1
100A ALT
F4 A, F5 B FUSIBLE LINK BLOCK
FL MAIN 2.0L
BATTERY
L 4 LUGGAGE COMPARTMENT KEY UNLOCK SW
Lower back panel center
Left side of the upper back panel
J 2 JUNCTION CONNECTOR
D15 DOOR LOCK MOTOR AND DOOR UNLOCK DETECTION SW RH
D13 DOOR LOCK MOTOR AND DOOR UNLOCK DETECTION SW LH
D11 DOOR KEY LOCK AND UNLOCK SW RH
D10 DOOR KEY LOCK AND UNLOCK SW LH
P 6 DOOR LOCK CONTROL SW LH [POWER WINDOW MASTER SW]
To Unlock Warning SW<12–2
C10 THEFT DETERRENT INDICATOR LIGHT[COMB. METER]
E 3 ENGINE HOOD COURTESY SW
JUNCTION CONNECTOR
L 3 LUGGAGE COMPARTMENT COURTESY SW
Front side of the left fender
J 3 JUNCTION CONNECTOR
Instrument panel brace LH
Left kick panel

K OVERALL ELECTRICAL WIRING DIAGRAM

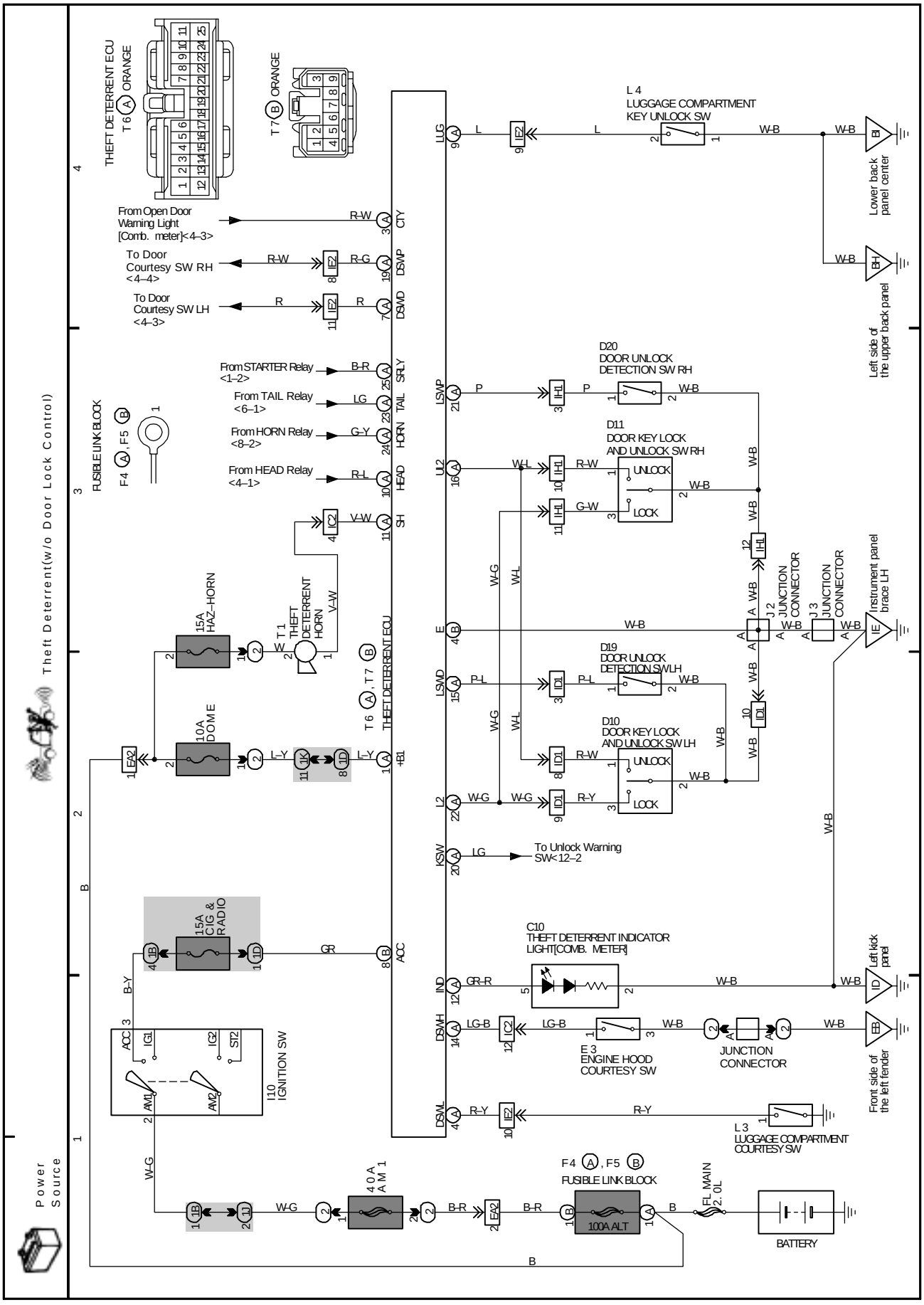

17 PASEO

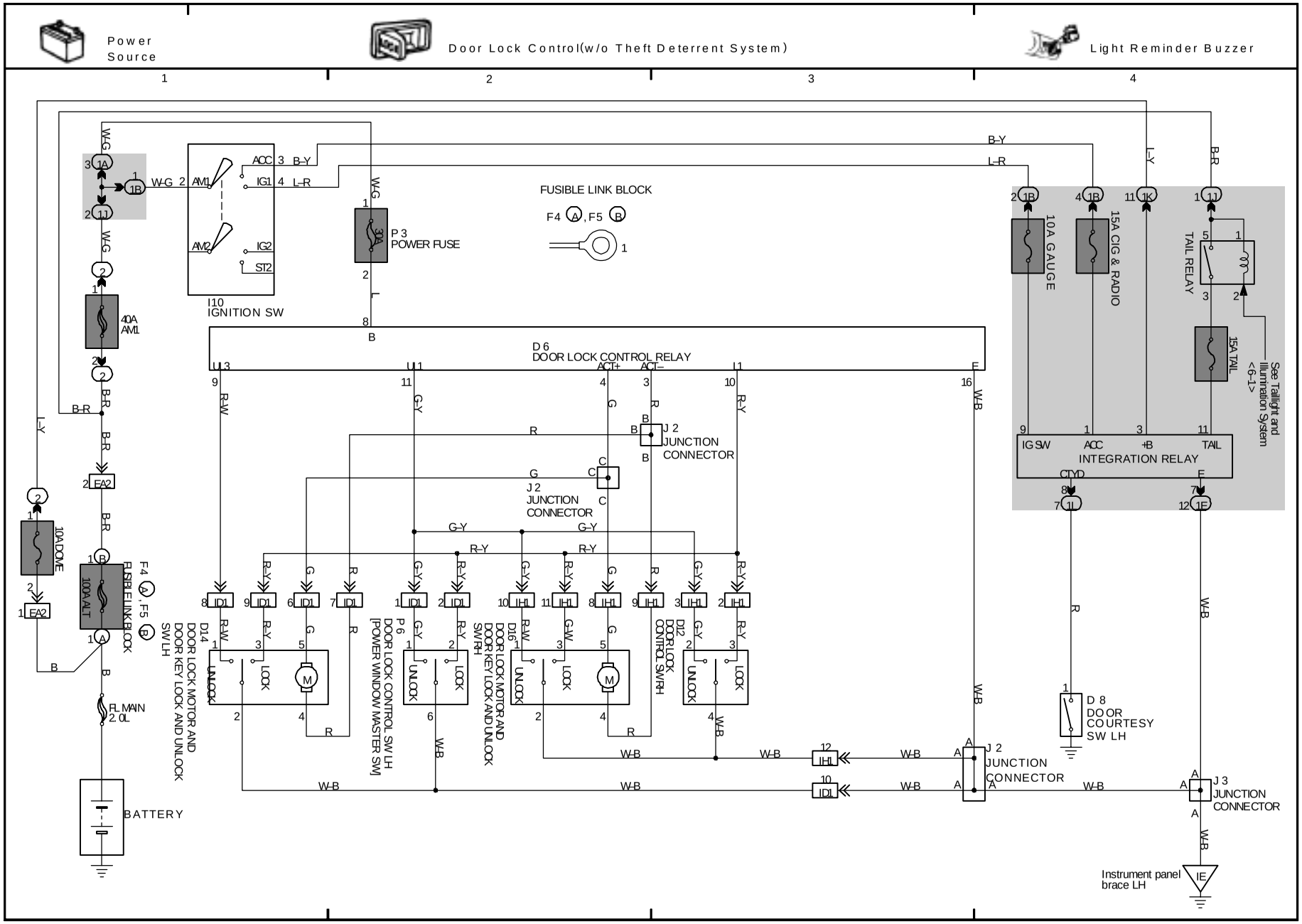

Power Source
Door Lock Control(w/o Theft Deterrent System)
Light Reminder Buzzer
FUSIBLE LINK BLOCK
F4 A, F5 B
I10 IGNITION SW
P 3 POWER FUSE
30A
40A AM1
10A DOME
100A ALT
F4 A, F5 B FUSIBLE LINK BLOCK
FL MAIN 2.0L
BATTERY
D 6 DOOR LOCK CONTROL RELAY
J 2 JUNCTION CONNECTOR
D14 DOOR LOCK MOTOR AND DOOR KEY LOCK AND UNLOCK SW LH
P 6 DOOR LOCK CONTROL SW LH [POWER WINDOW MASTER SW]
D16 DOOR LOCK MOTOR AND DOOR KEY LOCK AND UNLOCK SW RH
D12 DOOR LOCK CONTROL SW RH
10A GAUGE
15A CIG & RADIO
TAIL RELAY
15A TAIL
INTEGRATION RELAY
See Taillight and Illumination System <6-1>
D 8 DOOR COURTESY SW LH
J 3 JUNCTION CONNECTOR
Instrument panel brace LH

K OVERALL ELECTRICAL WIRING DIAGRAM

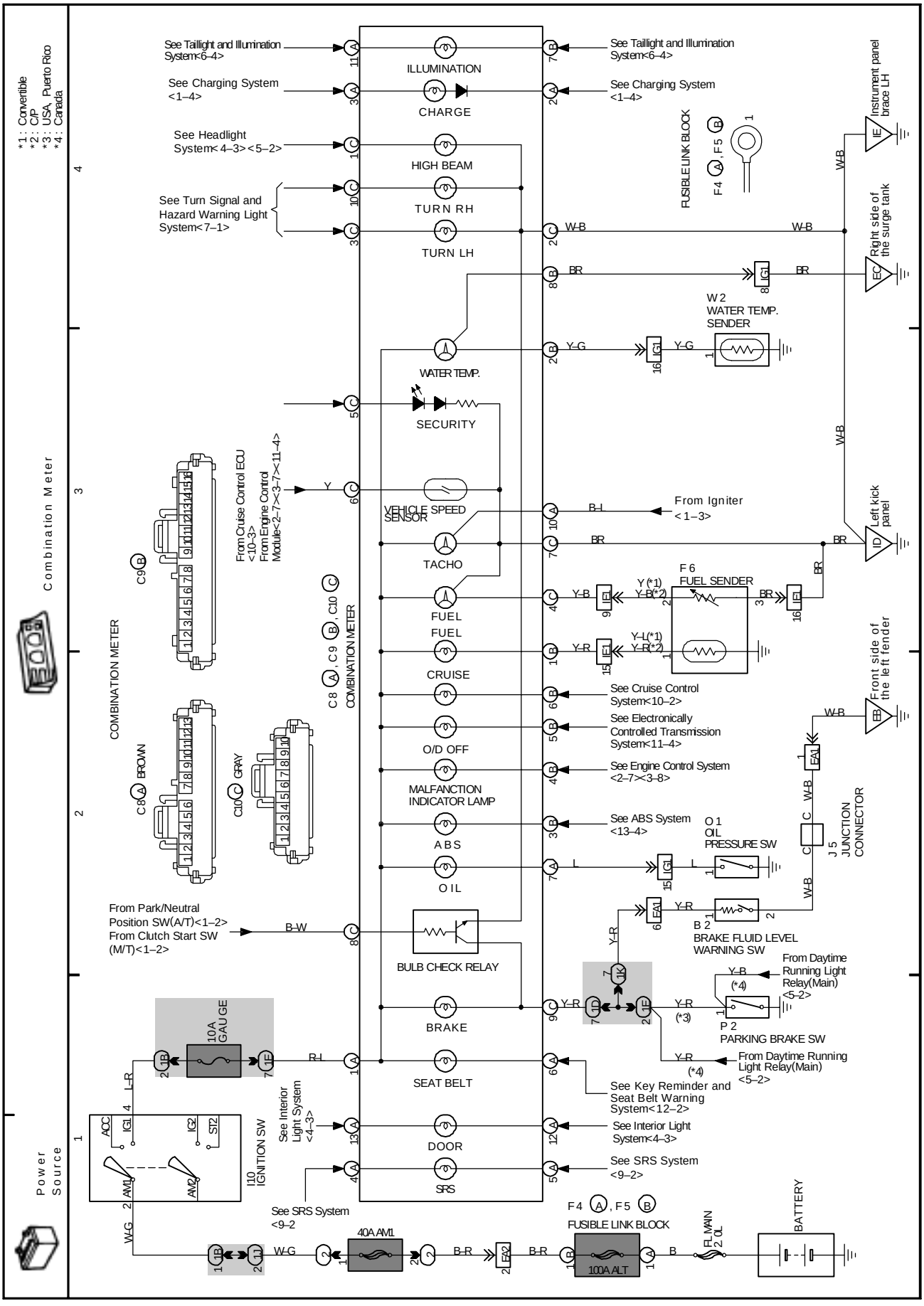

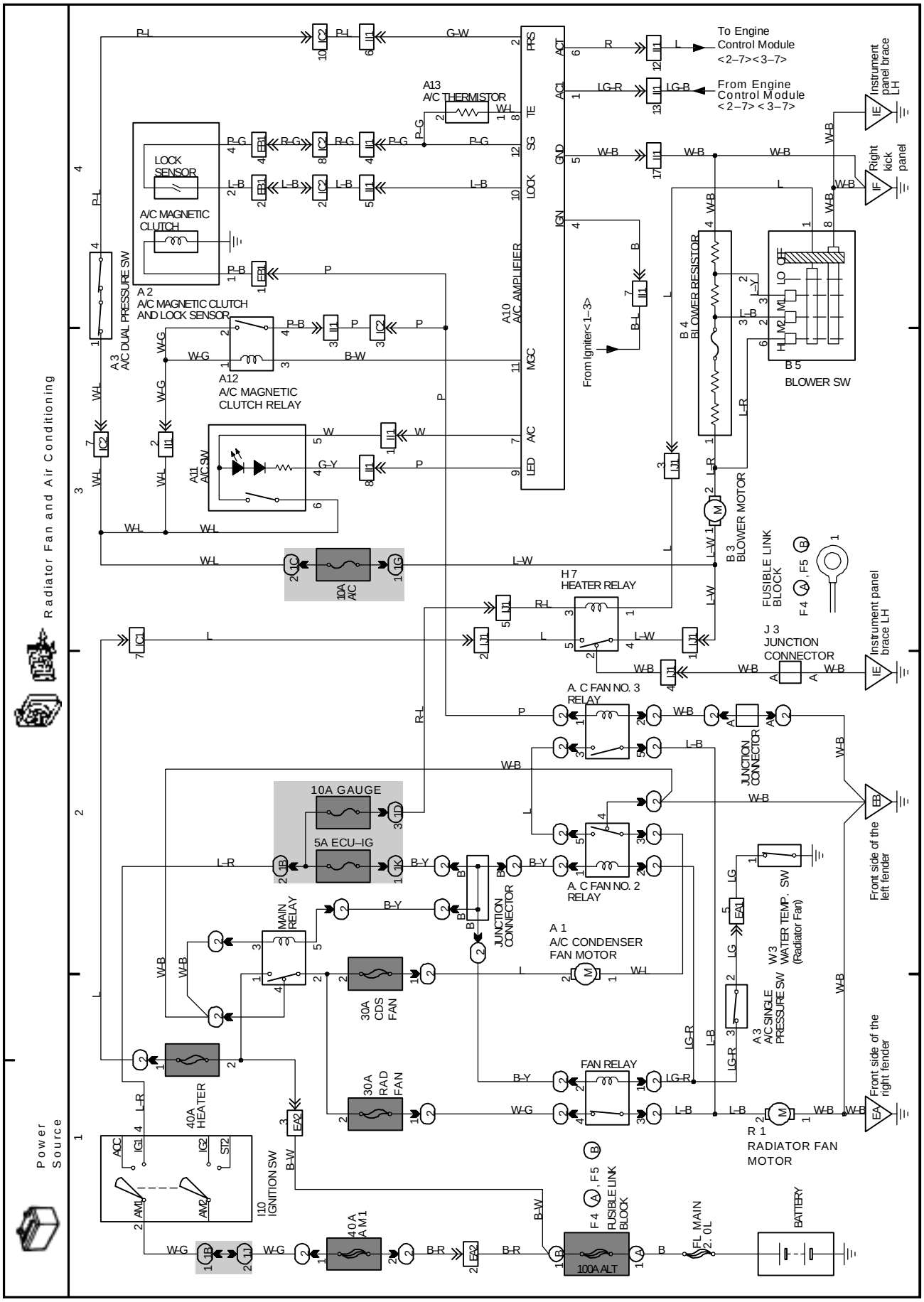
Radiator Fan and Air Conditioning
Power Source
To Engine Control Module <2–7><3–7>
From Engine Control Module <2–7><3–7>
A13 A/C THERMISTOR
LOCK SENSOR
A/C MAGNETIC CLUTCH
A 2 A/C MAGNETIC CLUTCH AND LOCK SENSOR
A 3 A/C DUAL PRESSURE SW
A12 A/C MAGNETIC CLUTCH RELAY
A11 A/C SW
A10 A/C AMPLIFIER
From Igniter<1–3>
B 4 BLOWER RESISTOR
B 5 BLOWER SW
B 3 BLOWER MOTOR
H 7 HEATER RELAY
FUSIBLE LINK BLOCK
F 4 , F5
J 3 JUNCTION CONNECTOR
A. C FAN NO. 3 RELAY
A. C FAN NO. 2 RELAY
10A GAUGE
5A ECU–IG
MAIN RELAY
30A CDS FAN
30A RAD FAN
40A HEATER
FAN RELAY
A 1 A/C CONDENSER FAN MOTOR
W3 WATER TEMP. SW (Radiator Fan)
A3 A/C SINGLE PRESSURE SW
R 1 RADIATOR FAN MOTOR
I10 IGNITION SW
40A AM1
100A ALT
FL MAIN 2.0L
BATTERY
Instrument panel brace LH
Right kick panel
Front side of the left fender
Front side of the right fender
JUNCTION CONNECTOR
10A A/C
ACC
IG1
IG2
ST2
LO
M1
M2
HI
OFF

H POWER SOURCE (Current Flow Chart)

The chart below shows the route by which current flows from the battery to each electrical source (Fusible Link, Circuit Breaker, Fuse, etc.) and other parts.

The next page and following pages show the parts to which each electrical source outputs current.

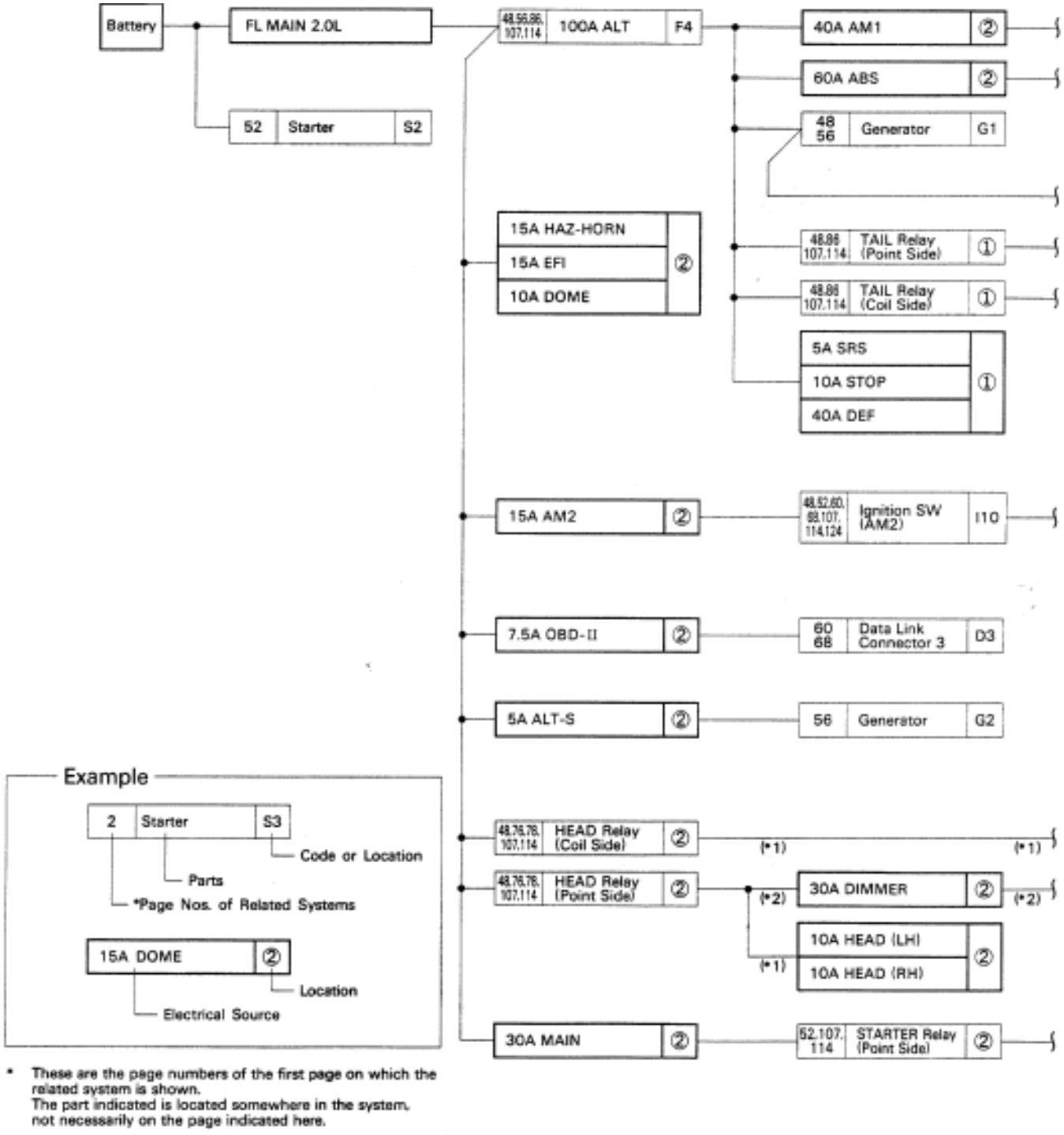

* These are the page numbers of the first page on which the related system is shown.
The part indicated is located somewhere in the system, not necessarily on the page indicated here.

[LOCATION] ①: Driver's Side J/B (See Page 20) ②: Engine Room J/B (See Page 22)
③: Engine Room R/B No.5 (See Page 23) ④: Power Fuse (P3 See Page 27)

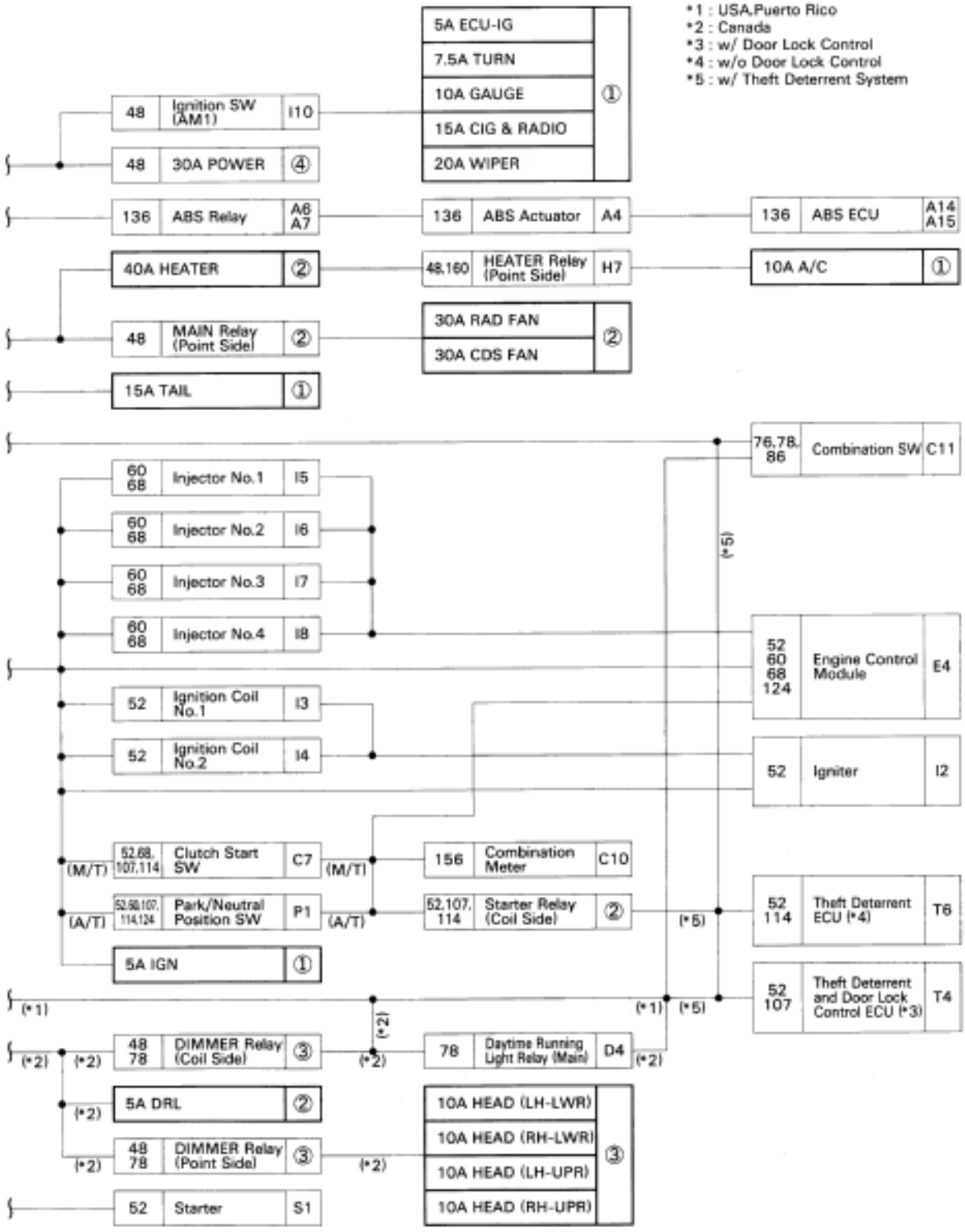
*1 : USA,Puerto Rico
*2 : Canada
*3 : w/ Door Lock Control
*4 : w/o Door Lock Control
*5 : w/ Theft Deterrent System
5A ECU-IG
7.5A TURN
10A GAUGE
15A CIG & RADIO
20A WIPER
①
48 Ignition SW (AM1) I10
48 30A POWER ④
136 ABS Relay A6 A7
136 ABS Actuator A4
136 ABS ECU A14 A15
40A HEATER ②
48,160 HEATER Relay (Point Side) H7
10A A/C ①
48 MAIN Relay (Point Side) ②
30A RAD FAN
30A CDS FAN
②
15A TAIL ①
76,78, 86 Combination SW C11
60 68 Injector No.1 I5
60 68 Injector No.2 I6
60 68 Injector No.3 I7
60 68 Injector No.4 I8
52 60 68 124 Engine Control Module E4
52 Ignition Coil No.1 I3
52 Ignition Coil No.2 I4
52 Igniter I2
(M/T) 52,68, 107,114 Clutch Start SW C7
(M/T) 156 Combination Meter C10
(A/T) 52,68,107, 114,124 Park/Neutral Position SW P1
(A/T) 52,107, 114 Starter Relay (Coil Side) ②
(*5) 52 114 Theft Deterrent ECU (*4) T6
5A IGN ①
(*1) (*1) (*5) 52 107 Theft Deterrent and Door Lock Control ECU (*3) T4
(*2) 48 78 DIMMER Relay (Coil Side) ③
(*2) 78 Daytime Running Light Relay (Main) D4
(*2) 5A DRL ②
10A HEAD (LH-LWR)
10A HEAD (RH-LWR)
10A HEAD (LH-UPR)
10A HEAD (RH-UPR)
③
48 78 DIMMER Relay (Point Side) ③
52 Starter S1

H POWER SOURCE (Current Flow Chart)

*1 : USA/Canada
*2 : Canada

Location		CB or Fuse	A/C Condenser Fan Motor	A/C Magnetic Clutch and Lock Sensor	A/C Triple Pressure SW (A/C Dual and Single Pressure SW)	ABS Actuator	ABS Relay	A/C Amplifier	A/C SW	A/C Magnetic Clutch Relay	ABS ECU	ABS ECU	Airbag Sensor Assembly	Airbag Squib (Front Passen-ger's Airbag Assembly)	Airbag Squib (Steering Wheel Pad)	Back-Up Light SW (M/T)	Brake Fluid Level Warning SW	Blower Motor	Blower Resistor	Blower SW	Cigarette Lighter	Circuit Opening Relay	Clock
		*Page Nos. of Related Systems	160	160	160	136	136	160	86 160	160	136	136	140	140	140	94	156	160	160	86 160	98	60 68	98
			A1	A2	A3	A4	A6	A10	A11	A12	A14	A15	A16	A17	A18	B1	B2	B3	B4	B5	C4	C5	C6
①	5A	ECU-IG			●							●											
	5A	IGN											●	●	●								
	5A	SRS											●										
	7.5A	TURN																					
	10A	A/C		●	●			●	●	●													
	10A	GAUGE				●	●				●	●				●	●			●			
	10A	STOP										●											
	15A	CIG & RADIO											●	●	●						●		●
	15A	TAIL							●											●			●
	20A	WIPER																					
	40A	DEF																					
②	10A	DOME																					●
	15A	EFI																				●	
	15A	HAZ-HORN																					
	10A	HEAD(LH)(*1)																					
	10A	HEAD(RH)(*1)																					
	30A	CDS FAN	●																				
	30A	RAD FAN																					
	40A	HEATER						●										●	●	●			
③	5A	DRL																					
	10A	HEAD(LH-LWR)(*2)																					
	10A	HEAD(RH-LWR)(*2)																					
	10A	HEAD(LH-UPR)(*2)																					
	10A	HEAD(RH-UPR)(*2)																					
④	30A	POWER																					

* These are the page numbers of the first page on which the related system is shown.
The part indicated is located somewhere in the system.not necessarily on the page indicated here.

[LOCATION] ①: Driver's Side J/B (See Page 20) ②: Engine Room J/B (See Page 22)
③: Engine Room R/B No.5 (See Page 23) ④: Power Fuse (P3 See Page 27)

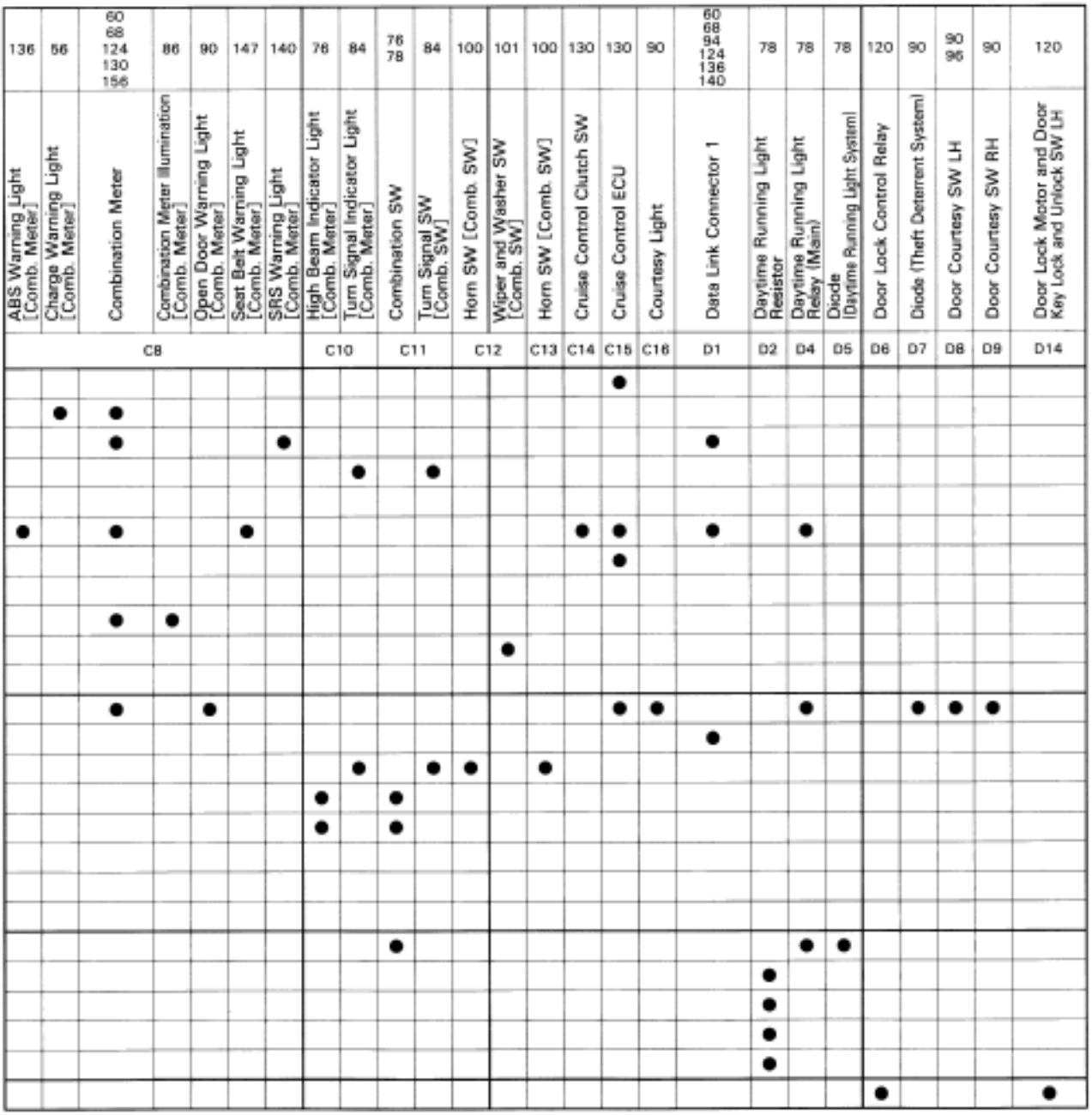
136 ABS Warning Light [Comb. Meter] C8
56 Charge Warning Light [Comb. Meter] C8
60 68 124 130 156 Combination Meter C8
86 Combination Meter Illumination [Comb. Meter] C8
90 Open Door Warning Light [Comb. Meter] C8
147 Seat Belt Warning Light [Comb. Meter] C8
140 SRS Warning Light [Comb. Meter] C8
76 High Beam Indicator Light [Comb. Meter] C10
84 Turn Signal Indicator Light [Comb. Meter] C10
76 78 Combination SW C11
84 Turn Signal SW [Comb. SW] C11
100 Horn SW [Comb. SW] C11
101 Wiper and Washer SW [Comb. SW] C12
100 Horn SW [Comb. SW] C13
130 Cruise Control Clutch SW C14
130 Cruise Control ECU C15
90 Courtesy Light C16
60 68 94 124 136 140 Data Link Connector 1 D1
78 Daytime Running Light Resistor D2
78 Daytime Running Light Relay (Main) D4
78 Diode (Daytime Running Light System) D5
120 Door Lock Control Relay D6
90 Diode (Theft Deterrent System) D7
90 95 Door Courtesy SW LH D8
90 Door Courtesy SW RH D9
120 Door Lock Motor and Door Key Lock and Unlock SW LH D14

H POWER SOURCE (Current Flow Chart)

*1 : USA Drivers Only
*2 : Canada

Location	CB or Fuse		Door Lock Motor and Door Key Lock and Unlock SW RH	Engine Control Module	Engine Control Module	Front Turn Signal Light and Parking Light LH	Front Turn Signal Light and Parking Light RH	Front Wiper Motor	Fuel Sender and Pump	Generator	Headlight LH	Headlight RH	Horn	Hazard SW	Heated Oxygen Sensor (Bank 1 Sensor 2)	Heater Relay (Point Side)	Heater Relay (Coil Side)	High Mounted Stop Light	Idle Air Control Valve	Igniter	License Plate Light LH	License Plate Light RH	Luggage Compartment Courtesy SW
		*Page Nos. of Related Systems	120	60 68 124	60 68 124	84 86	84 86	101	60 68 156	56 156	76 78	76 78	100	84 86	60 68	160	160	92	60 68	156	86	86	90
		Parts																					
		Code or Location																					
		CB or Fuse	D16	E5	E6	F1	F2	F3	F6	G2	H1	H2	H4	H5	H6	H7		H8	I1	I2	L1	L2	L3
①	5A	ECU-IG																					
	5A	IGN								●													
	5A	SRS																					
	7.5A	TURN				●	●							●									
	10A	A/C																					
	10A	GAUGE		●					●	●							●			●			
	10A	STOP		●	●													●					
	15A	CIG & RADIO																					
	15A	TAIL				●	●							●							●	●	
	20A	WIPER						●															
	40A	DEF																					
②	10A	DOME																					●
	15A	EFI		●	●				●						●				●				
	15A	HAZ-HORN				●	●						●	●									
	10A	HEAD(LH)(*1)									●												
	10A	HEAD(RH)(*1)										●											
	30A	CDS FAN																					
	30A	RAD FAN																					
	40A	HEATER														●							
③	5A	DRL																					
	10A	HEAD(LH-LWR)(*2)									●												
	10A	HEAD(RH-LWR)(*2)										●											
	10A	HEAD(LH-UPR)(*2)									●												
	10A	HEAD(RH-UPR)(*2)										●											
④	30A	POWER	●																				

* These are the page numbers of the first page on which the related system is shown.
The part indicated is located somewhere in the system,not necessarily on the page indicated here.

[LOCATION] ①: Driver's Side J/B (See Page 20) ②: Engine Room J/B (See Page 22)
③: Engine Room R/B No.5 (See Page 23) ④: Power Fuse (P3 See Page 27)

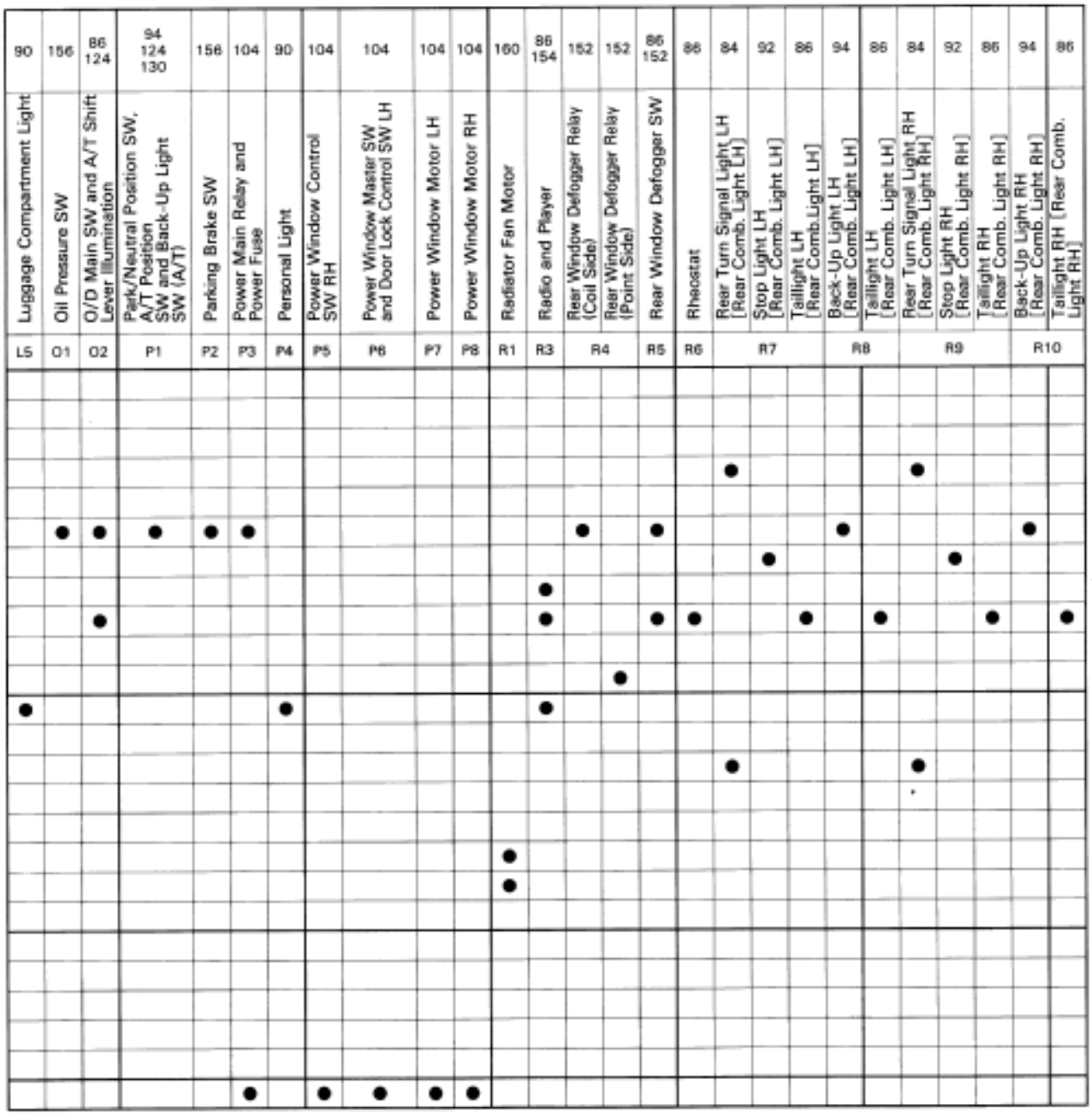
90 Luggage Compartment Light L5
156 Oil Pressure SW O1
86 124 O/D Main SW and A/T Shift Lever Illumination O2
94 124 130 Park/Neutral Position SW, A/T Position SW and Back-Up Light SW (A/T) P1
156 Parking Brake SW P2
104 Power Main Relay and Power Fuse P3
90 Personal Light P4
104 Power Window Control SW RH P5
104 Power Window Master SW and Door Lock Control SW LH P6
104 Power Window Motor LH P7
104 Power Window Motor RH P8
160 Radiator Fan Motor R1
86 154 Radio and Player R3
152 Rear Window Defogger Relay (Coil Side) R4
152 Rear Window Defogger Relay (Point Side) R4
86 152 Rear Window Defogger SW R5
88 Rheostat R6
84 Rear Turn Signal Light LH [Rear Comb. Light LH] R7
92 Stop Light LH [Rear Comb. Light LH] R7
86 Taillight LH [Rear Comb.Light LH] R7
94 Back-Up Light LH [Rear Comb. Light LH] R8
86 Taillight LH [Rear Comb. Light LH] R8
84 Rear Turn Signal Light RH [Rear Comb. Light RH] R9
92 Stop Light RH [Rear Comb. Light RH] R9
86 Taillight RH [Rear Comb. Light RH] R9
94 Back-Up Light RH [Rear Comb. Light RH] R10
86 Taillight RH [Rear Comb. Light RH]

H POWER SOURCE (Current Flow Chart)

*1 : USA/Canada Hvc
*2 : Canada

Location	Code or Location	CB or Fuse	Rear Window Defogger (+)	Shift Lock ECU	Stop Light SW	Theft Deterrent Horn	Turn Signal Flasher	Theft Deterrent and Door Lock Control ECU	Theft Deterrent and Door Lock Control ECU	Theft Deterrent ECU	Theft Deterrent ECU	VSV (EVAP)	VSV (Vapor Pressure Sensor)	Washer Motor	Water Temp. Sender	Water Temp. SW (Radiator Fan)	Integration Relay	A.C FAN NO.2 Relay (Coil Side)	A.C FAN NO.2 Relay (Point Side)	A.C FAN NO.3 Relay (Coil Side)	A.C FAN NO.3 Relay (Point Side)	EFI Relay (Coil Side)	EFI Relay (Point Side)
		*Page Nos. of Related Systems	152	150	60.90 92.124 130.134 150	107 114	84	107	107	114	114	60 63	60 68	101	156	160	90 96 147	160	160	160	160	60 68 124	60 68 124
		CB or Fuse	R13	S3	S4	T1	T3	T4	T5	T6	T7	V4	V5	W1	W2	W3	①	②					
①	5A	ECU-IG		●												●		●					
	5A	IGN																				●	
	5A	SRS																					
	7.5A	TURN					●																
	10A	A/C																		●			
	10A	GAUGE													●		●						
	10A	STOP		●	●																		
	15A	CIG & RADIO		●					●		●						●						
	15A	TAIL															●						
	20A	WIPER												●									
	40A	DEF	●																				
②	10A	DOME						●		●							●						
	15A	EFI										●	●										●
	15A	HAZ-HORN				●	●	●		●													
	10A	HEAD(LH)(*1)																					
	10A	HEAD(RH)(*1)																					
	30A	CDS FAN																	●		●		
	30A	RAD FAN																					
	40A	HEATER																					
③	5A	DRL																					
	10A	HEAD(LH-LWR)(*2)																					
	10A	HEAD(RH-LWR)(*2)																					
	10A	HEAD(LH-UPR)(*2)																					
	10A	HEAD(RH-UPR)(*2)																					
④	30A	POWER							●														

* These are the page numbers of the first page on which the related system is shown.
The part indicated is located somewhere in the system.not necessarily on the page indicated here.

[LOCATION] ①: Driver's Side J/B (See Page 20) ②: Engine Room J/B (See Page 22)
③: Engine Room R/B No.5 (See Page 23) ④: Power Fuse (P3 See Page 27)

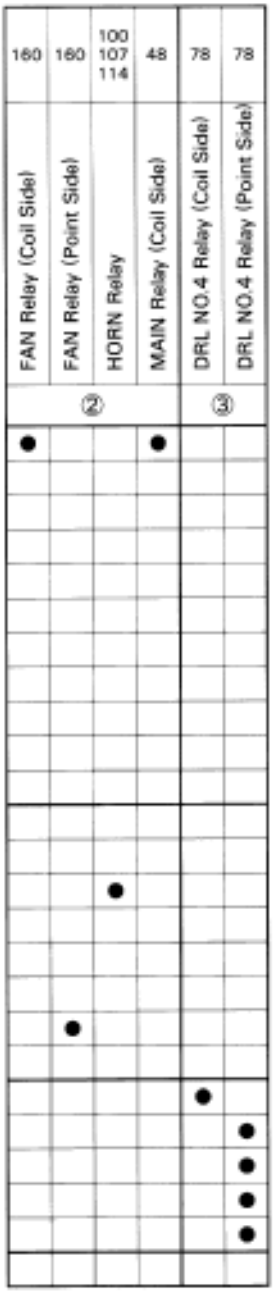
160
160
100
107
114
48
78
78
FAN Relay (Coil Side)
FAN Relay (Point Side)
HORN Relay
MAIN Relay (Coil Side)
DRL NO.4 Relay (Coil Side)
DRL NO.4 Relay (Point Side)
②
③

F RELAY LOCATIONS

[Engine Compartment]

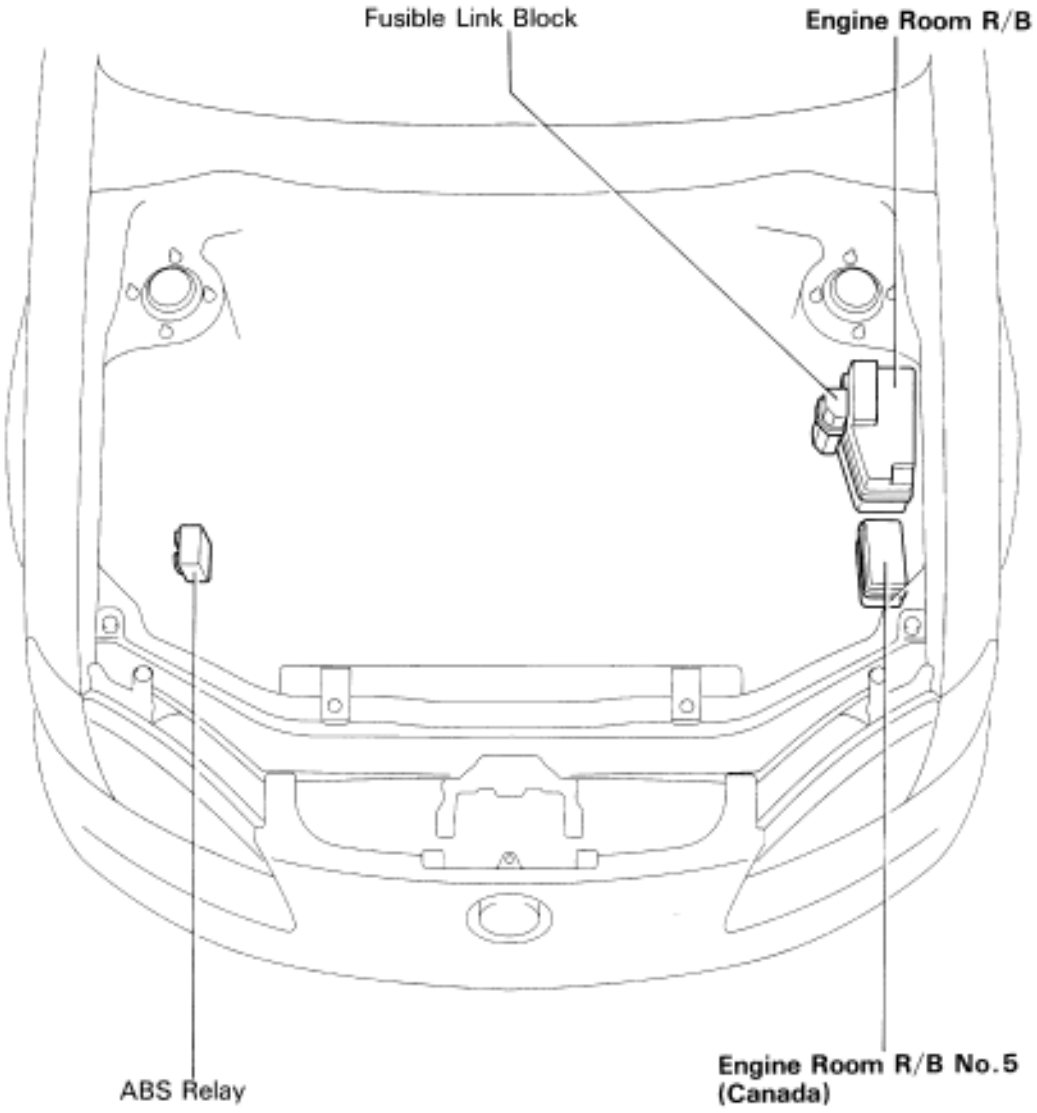

[Instrument Panel]

*1:w/ Theft Deterrent System,w/ Door Lock Control
*2:w/ Theft Deterrent System,w/o Door Lock Control
*3:w/o Theft Deterrent System,w/ Door Lock Control

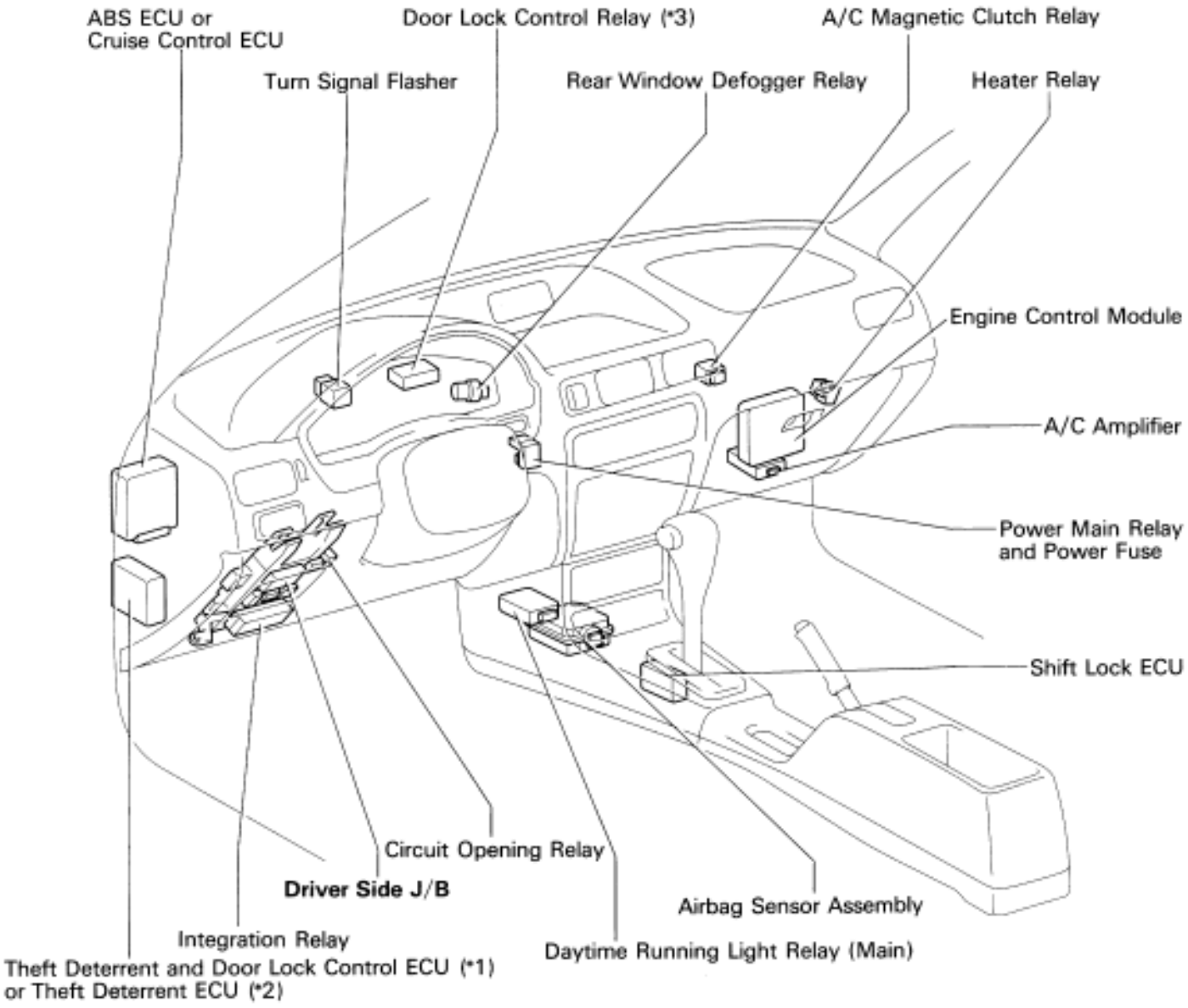

F RELAY LOCATIONS

: Driver Side J/B	Left Kick Panel (See Page 19)

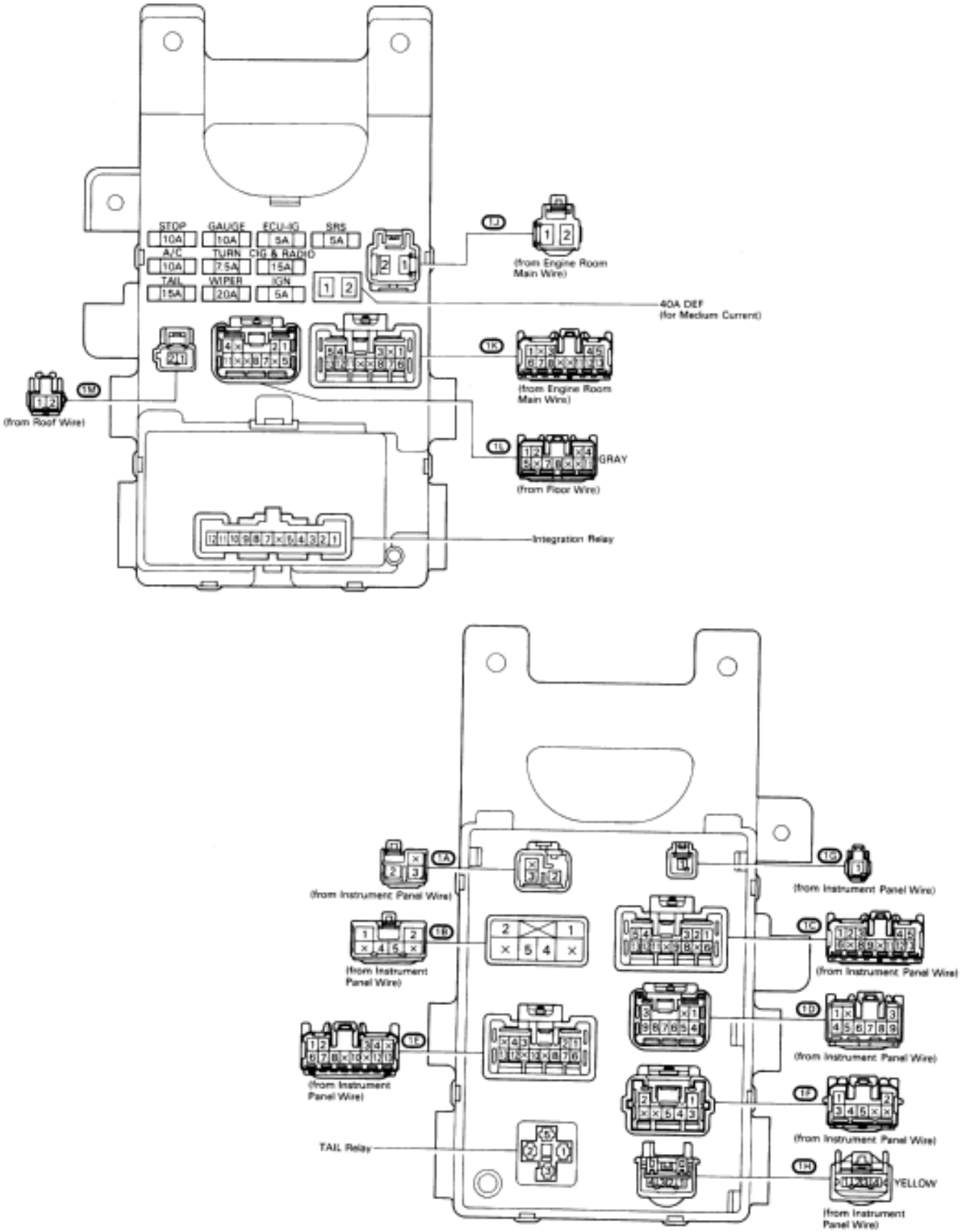

[Driver Side J/B Inner Circuit]

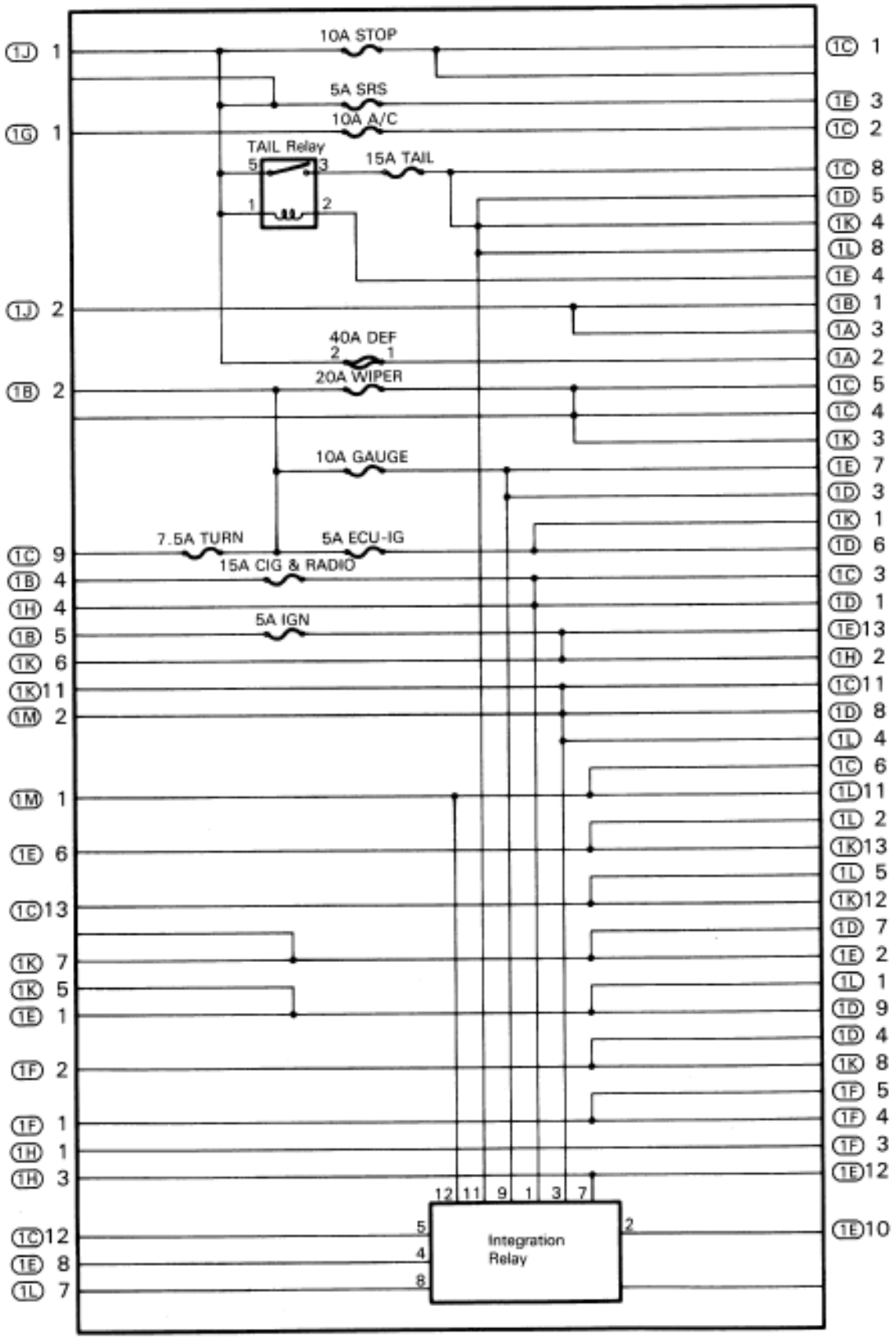

F RELAY LOCATIONS

② : Engine Room R/B	Engine Compartment Left (See Page 18)

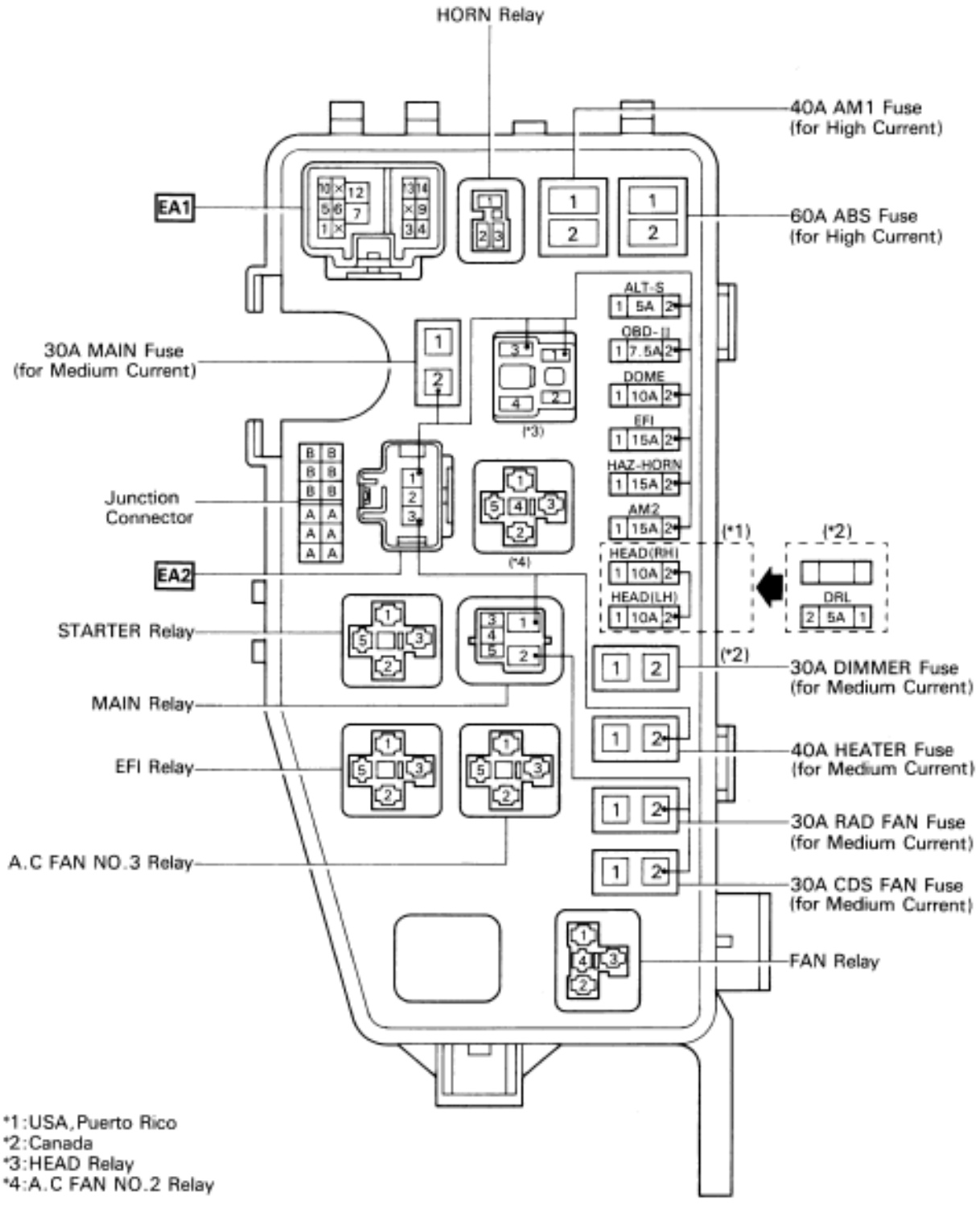

⑤ : Engine Room R/B No.5	Engine Compartment Left (See Page 18)

(Canada)

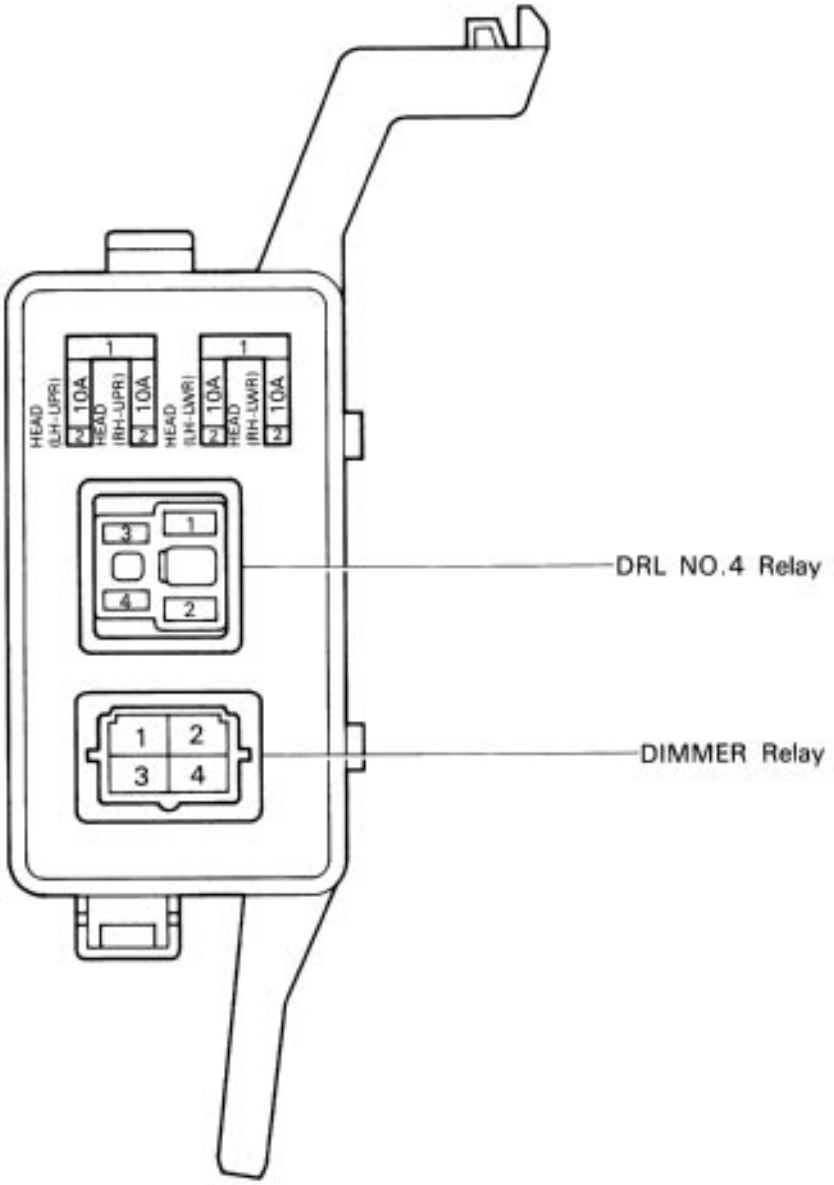

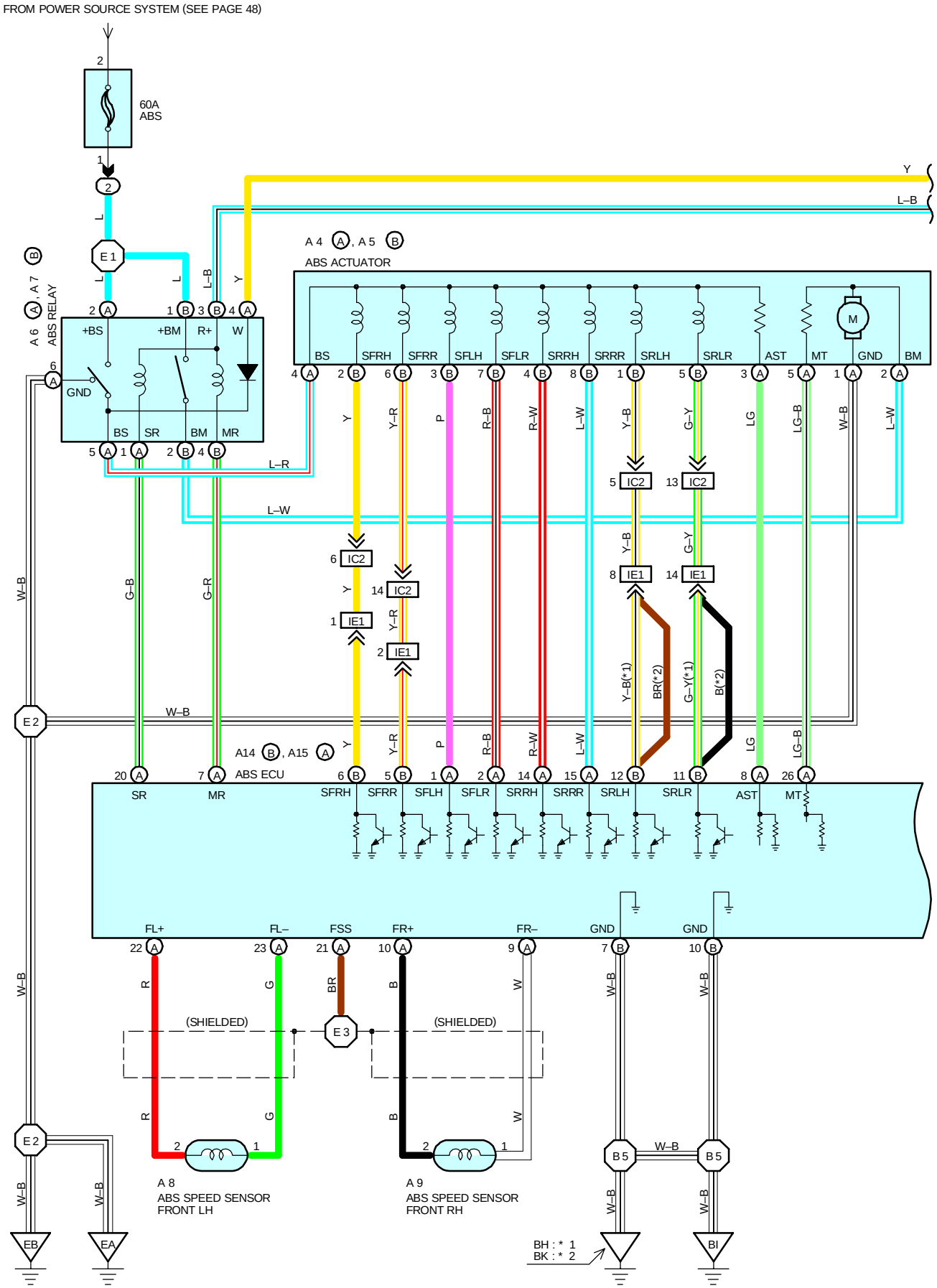
FROM POWER SOURCE SYSTEM (SEE PAGE 48)
60A ABS
E 1
A 6 , A 7 ABS RELAY
+BS
+BM
R+
W
GND
BS
SR
BM
MR
L–R
L–W
A 4 , A 5
ABS ACTUATOR
BS
SFRH
SFRR
SFLH
SFLR
SRRH
SRRR
SRLH
SRLR
AST
MT
GND
BM
M
IC2
IE1
E 2
W–B
G–B
G–R
A14 , A15
ABS ECU
SR
MR
SFRH
SFRR
SFLH
SFLR
SRRH
SRRR
SRLH
SRLR
AST
MT
FL+
FL–
FSS
FR+
FR–
GND
GND
(SHIELDED)
E 3
(SHIELDED)
A 8
ABS SPEED SENSOR FRONT LH
A 9
ABS SPEED SENSOR FRONT RH
B 5
EB
EA
BI
BH : * 1
BK : * 2

*1 : C/P
*2 : CONVERTIBLE

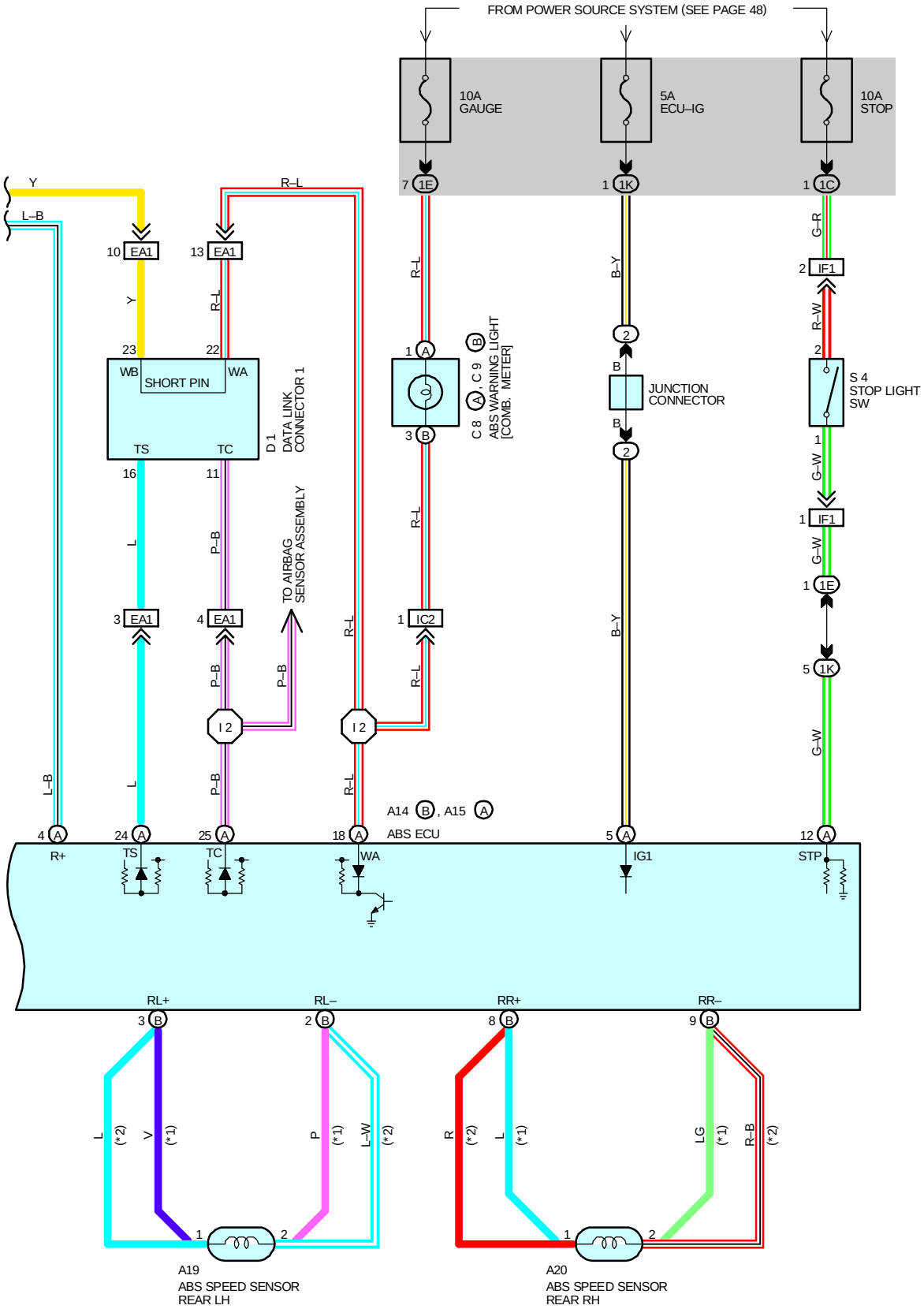

SYSTEM OUTLINE

THIS SYSTEM CONTROLS THE RESPECTIVE BRAKE FLUID PRESSURE ACTING ON THE DISC BRAKE CYKINDER OF THE RIGHT FRONT WHEEL, LEFT FRONT WHEEL AND REAR WHEELS WHEN THE BRAKES ARE APPLIED IN A PANIC STOP SO THAT THE WHEELS DO NOT LOCK. THIS RESULTS IN IMPROVED DIRECTIONAL STABILITY AND STEERABILITY DURING PANIC BRAKING.

1. INPUT SIGNALS

(1) SPEED SENSOR SIGNAL

THE SPEED OF THE WHEELS IS DETECTED AND INPUT TO **TERMINALS FL+,FR+, RL+** AND **RR+** OF THE ABS ECU

(2) STOP LIGHT SW SIGNAL

A SIGNAL IS INPUT TO **TERMINAL STP** OF THE ABS ECU WHEN BRAKE PEDAL IS DEPRESSED.

2. SYSTEM OPERATION

DURING SUDDEN BRAKING THE ABS ECU, WHICH HAS SIGNALS INPUT FROM EACH SENSOR, CONTROLS TH E CURRENT FLOWING TO THE SOLENIOD INSIDE THE ACTUATOR AND LETS TH EHYDRAULIC PRESSURE ACTING ON EACH WHEEL CYLINDER ESCAPE TO THE RESERVIOR. THE PUMP INSIDE THE ACTUATOR IS ALSO OPERATING AT THIS TIME AND IT RETURNS THE BRAKE FLUID FROM THE RESERVIOR TO THE MASTER CYLINDER, THUS PREVENTING LOCKING OF THE VEHICLE WHEELS.

IF THE ABS ECU JUDGES THAT THE HYDRAULIC PRESSURE ACTING ON THE WHEEL CYLINDER IS INSUFFICIENT, THE CURRENT ACTING ON THE SOLENIOD IS CONTROLLED AND THE HYDRAULIC PRESSURE IS INCREASED. HOLDING OF THE HYDRAULIC PRESSURE IS ALSO CONTROLLED BY THE ABS ECU, BY THE SAME METHOD AS ABOVE. BY REPEATED PRESSURE REDUCTION, HOLDING AND INCREASE ARE REPEATED TO MAINTAIN VEHICLE STABILITY AND TO IMPROVE STEERABILITY DURING SUDDEN BRAKING.

SERVICE HINTS

A14(B), A15(A) ABS ECU

(CONNECT THE ECU CONNECTORS)

(B) 7–GROUND : ALWAYS CONTINUITY
(B)10–GROUND : ALWAYS CONTINUITY
(A) 5–GROUND : APPROX. 12 VOLTS WITH THE IGNITION SW ON
(A)12–GROUND : APPROX. 12 VOLTS WITH THE BRAKE PEDAL DEPRESSED (STOP LIGHT SW ON)
(A)24–GROUND : APPROX. 12 VOLTS WITH THE IGNITION SW ON AND THE DATA LINK CONNECTOR 1 TS–E1 NOT CONNECTED
(A)25–GROUND : APPROX. 12 VOLTS WITH THE IGNITION SW ON AND THE DATA LINK CONNECTOR 1 TC–E1 NOT CONNECTED
(B) 5–GROUND, (B) 6–GROUND : APPROX.12 VOLTS WITH THE IGNITION SW ON AND THE ABS WARNING LIGHT GOES OFF
(B)11–GROUND, (B)12–GROUND : APPROX.12 VOLTS WITH THE IGNITION SW ON AND THE ABS WARNING LIGHT GOES OFF
(A) 1–GROUND, (A) 2–GROUND : APPROX.12 VOLTS WITH THE IGNITION SW ON AND THE ABS WARNING LIGHT GOES OFF
(A)14–GROUND, (A)15–GROUND : APPROX.12 VOLTS WITH THE IGNITION SW ON AND THE ABS WARNING LIGHT GOES OFF
(A) 8–GROUND, (A)26–GROUND : APPROX.12 VOLTS WITH THE IGNITION SW ON AND THE ABS WARNING LIGHT GOES OFF

(DISCONNECT THE ECU CONNECTORS)

(B) 3–(B) 2 : **0.9** KΩ–**1.3** KΩ
(B) 8–(B) 9 : **0.9** KΩ–**1.3** KΩ
(A) 7–(A) 4 : **52** KΩ–**80**Ω
(A)10–(A) 9 : **0.92** K –**1.22** KΩ
(A) 4–(A)20 : **67** Ω –**100** Ω
(A)22–(A)23 : **0.92** KΩ –**1.22** KΩ

: PARTS LOCATION

CODE		SEE PAGE	CODE		SEE PAGE	CODE		SEE PAGE
A 4	A	24	A 9		24	C 8	A	26
A 5	B	24	A14	B	26	C 9	B	26
A 6	A	24	A15	A	26	D 1		24
A 7	B	24	A19		28(C/P),29(CONVERTIBLE)	S 4		27
A 8		24	A20		28(C/P),29(CONVERTIBLE)			

: RELAY BLOCKS

CODE	SEE PAGE	RELAY BLOCKS (RELAY BLOCK LOCATION)
2	22	ENGINE ROOM R/B (ENGINE COMPARTMENT LEFT)

: JUNCTION BLOCK AND WIRE HARNESS CONNECTOR

CODE	SEE PAGE	JUNCTION BLOCK AND WIRE HARNESS (CONNECTOR LOCATION)
1C	20	INSTRUMENT PANEL WIRE AND DRIVER SIDE J/B (LEFT KICK PANEL)
1E		
1K	20	ENGINE ROOM MAIN WIRE AND DRIVER SIDE J/B (LEFT KICK PANEL)

: CONNECTOR JOINING WIRE HARNESS AND WIRE HARNESS

CODE	SEE PAGE	JOINING WIRE HARNESS AND WIRE HARNESS (CONNECTOR LOCATION)
EA1	30	ENGINE WIRE AND ENGINE ROOM MAIN WIRE (INSIDE OF THE ENGINE ROOM R/B)
IC2	32	INSTRUMENT PANEL WIRE AND ENGINE ROOM MAIN WIRE (LEFT KICK PANEL)
IE1	32	INSTRUMENT PANEL WIRE AND FLOOR WIRE (LEFT KICK PANEL)
IF1	34	INSTRUMENT PANEL WIRE AND SWITCH WIRE (NEAR THE STEERING COLUM)

: GROUND POINTS

CODE	SEE PAGE	GROUND POINTS LOCATION
EA	30	FRONT SIDE OF THE RIGHT FENDER
EB	30	FRONT SIDE OF THE LEFT FENDER
BH	36(C/P)	LEFT SIDE OF THE UPPER BACK PANEL
BI	36(C/P)	LOWER BACK PANEL CENTER
	37(CONVERTIBLE)	
BK	37(CONVERTIBLE)	UPPER THE REAR WHEEL HOUSE LH

: SPLICE POINTS

CODE	SEE PAGE	WIRE HARNESS WITH SPLICE POINTS	CODE	SEE PAGE	WIRE HARNESS WITH SPLICE POINTS
E 1	30	ENGINE ROOM MAIN WIRE	I 2	34	ENGINE ROOM MAIN WIRE
E 2			B 5	36(C/P)	FLOOR WIRE
E 3				37(CONVERTIBLE)	

A 4 (A) GRAY

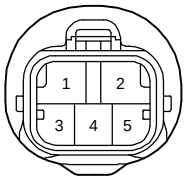

A 5 (B) GRAY

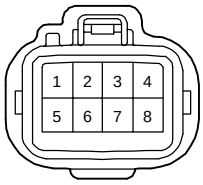

A 6 (A) GRAY

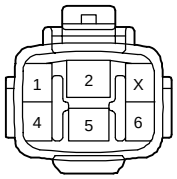

A 7 (B) GRAY

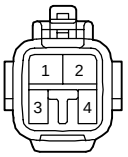

A 8

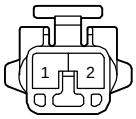

A 9

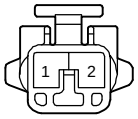

A14 (B) DARK GRAY

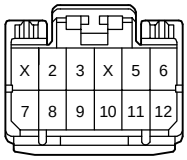

A15 (A) DARK GRAY

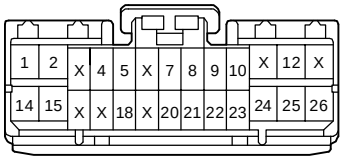

A19

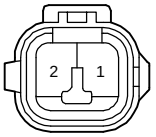

A20

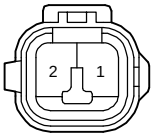

C 8 (A) BROWN

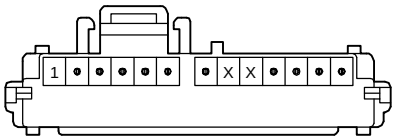

C 9 (B)

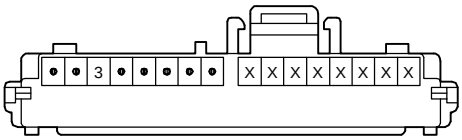

D 1 BLACK

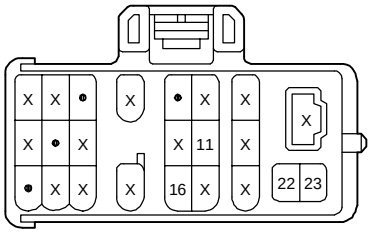

(W/ CRUISE CONTROL) S 4

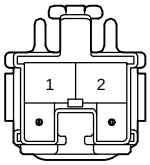

(W/O CRUISE CONTROL) S 4

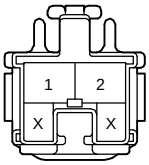

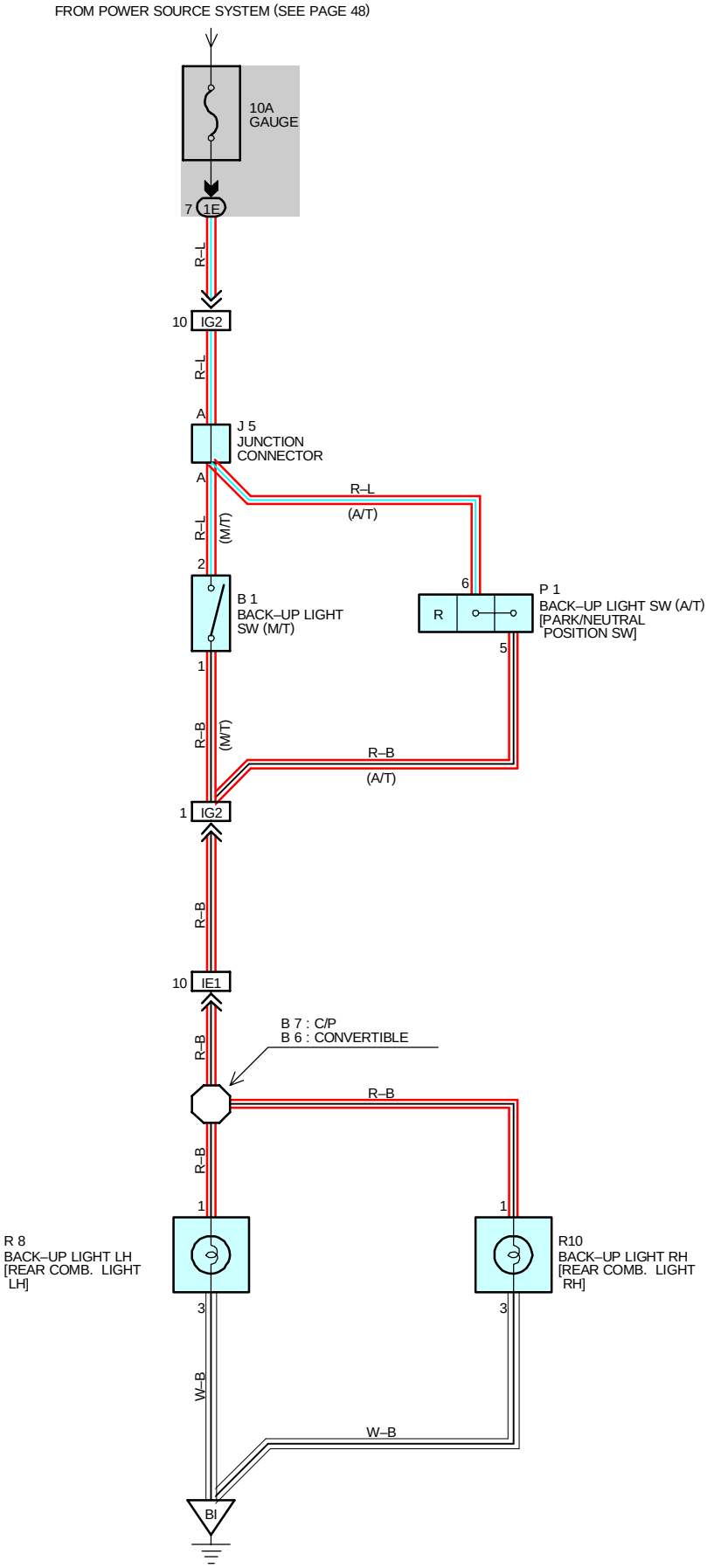
FROM POWER SOURCE SYSTEM (SEE PAGE 48)
10A
GAUGE
7 1E
R–L
10 IG2
R–L
A
J 5
JUNCTION
CONNECTOR
A
R–L
(A/T)
R–L
(M/T)
2
B 1
BACK–UP LIGHT
SW (M/T)
6
R
P 1
BACK–UP LIGHT SW (A/T)
[PARK/NEUTRAL
POSITION SW]
5
1
R–B
(M/T)
R–B
(A/T)
1 IG2
R–B
10 IE1
R–B
B 7 : C/P
B 6 : CONVERTIBLE
R–B
R–B
1
1
1
R 8
BACK–UP LIGHT LH
[REAR COMB. LIGHT
LH]
R10
BACK–UP LIGHT RH
[REAR COMB. LIGHT
RH]
3
3
W–B
W–B
BI

SERVICE HINTS

P 1 BACK–UP LIGHT SW (A/T) (PARK/NEUTRAL POSITION SW)
6–5 : CLOSED WITH THE SHIFT LEVER IN R POSITION
B 1 BACK–UP LIGHT SW (M/T)
2–1 : CLOSED WITH THE SHIFT LEVER IN R POSITION

: PARTS LOCATION

CODE	SEE PAGE	CODE	SEE PAGE	CODE	SEE PAGE
B 1	24	P I	25	R10	28(C/P), 29(CONVERTIBLE)
J 5	27	R 8	28(C/P), 29(CONVERTIBLE)		29

: JUNCTION BLOCK AND WIRE HARNESS CONNECTOR

CODE	SEE PAGE	JUNCTION BLOCK AND WIRE HARNESS (CONNECTOR LOCATION)
1E	20	INSTRUMENT PANEL WIRE AND DRIVER SIDE J/B (LEFT KICK PANEL)

: CONNECTOR JOINING WIRE HARNESS AND WIRE HARNESS

CODE	SEE PAGE	JOINING WIRE HARNESS AND WIRE HARNESS (CONNECTOR LOCATION)
IE1	32	INSTRUMENT PANEL WIRE AND FLOOR WIRE (LEFT KICK PANEL)
IG2	34	ENGINE WIRE AND INSTRUMENT PANEL WIRE (NEAR THE BLOWER UNIT)

: GROUND POINTS

CODE	SEE PAGE	GROUND POINTS LOCATION
BI	32(C/P) 37(CONVERTIBLE)	LOWER BACK PANEL CENTER

: SPLICE POINTS

CODE	SEE PAGE	WIRE HARNESS WITH SPLICE POINTS	CODE	SEE PAGE	WIRE HARNESS WITH SPLICE POINTS
B 6	37(CONVERTIBLE)	FLOOR WIRE	B 7	36(C/P)	FLOOR WIRE

B 1 GRAY

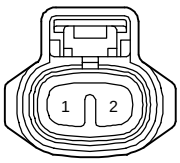

J 5 GRAY

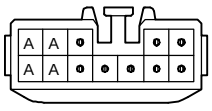

(HINT : SEE PAGE 7)

P 1 GRAY

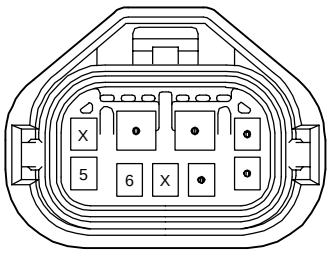

R 8

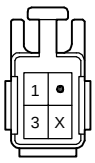

R10

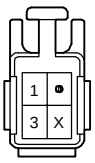

SYSTEM OUTLINE

CURRENT IS APPLIED AT ALL TIMES THROUGH **STOP** FUSE TO **TERMINAL 2** OF THE STOP LIGHT SW AND ALSO THROUGH THE **DOME** FUSE TO **TERMINAL 15** OF THE CRUISE CONTROL ECU.
WITH THE IGNITION SW TURNED TO ON, THE CURRENT FLOWS THROUGH **GAUGE** FUSE TO **TERMINAL (A)1** OF THE CRUISE CONTROL INDICATOR LIGHT, AND THE CURRENT FLOWS THROUGH **ECU–IG** FUSE TO **TERMINAL 14** OF THE CRUISE CONTROL ECU.
WHEN THE IGNITION SW IS ON AND THE CRUISE CONTROL SW IS TURNED ON, A SIGNAL IS INPUT FROM **TERMINAL 4** OF THE CRUISE CONTROL SW TO **TERMINAL 18** OF THE CRUISE CONTROL ECU. AS A RESULT, THE CRUISE CONTROL ECU FUNCTIONS AND THE CURRENT FLOWS FROM **TERMINAL 14** OF THE CRUISE CONTROL ECU TO **TERMINAL 13 ➔ GROUND**, AND THE CRUISE CONTROL SYSTEM IS IN A CONDITION READY FOR OPERATION.
AT THE SAME TIME, THE CURRENT THROUGH THE **GAUGE** FUSE FLOWS FROM **TERMINAL (A)1** OF THE CRUISE CONTROL INDICATOR LIGHT **➔ TERMINAL (B) 6 ➔ TERMINAL 7** OF THE CRUISE CONTROL ECU **➔ TERMINAL 13 ➔ GROUND**, CAUSING THE CRUISE CONTROL INDICATOR LIGHT UP, INDICATING THAT THE CRUISE CONTROL IS READY FOR OPERATION.

1. SET OPERATION

WHEN THE CRUISE CONTROL MAIN SW IS TURNED ON AND THE SET SW IS PUSHED WITH THE VEHICLE SPEED WITHIN THE SET LIMIT(APPROX. **40** KM/H, **25** MPH TO **200** KM/H, **124** MPH), A SIGNAL IS INPUT TO **TERMINAL 18** OF THE CRUISE CONTROL ECU AND THE VEHICLE SPEED AT THE TIME SET SW IS RELEASED IS MEMORIZED IN THE CRUISE CONTROL ECU AS SET SPEED.

2. SET SPEED CONTROL

DURING CRUISE CONTROL DRIVING, THE CRUISE CONTROL ECU COMPARES THE SET SPEED MEMORIZED IN THE CRUISE CONTROL ECU WITH THE ACTUAL VEHICLE SPEED INPUT INTO **TERMINAL 20** OF THE CRUISE CONTROL ECU FROM THE VEHICLE SPEED SENSOR, AND CONTROLS THE CRUISE CONTROL ACTUATOR TO MAINTAIN THE SET SPEED.
WHEN THE ACTUAL SPEED IS LOWER THAN THE SET SPEED, THE ECU CAUSES THE CURRENT TO THE CRUISE CONTROL ACTUATOR TO FLOW FROM **TERMINAL 12** OF THE CRUISE CONTROL ECU TO **TERMINAL 1** OF THE CRUISE CONTROL ACTUATOR **➔ TERMINAL 2 ➔ TERMINAL 11** OF THE CRUISE CONTROL ECU. AS A RESULT, THE MOTOR IN THE CRUISE CONTROL ACTUATOR IS ROTATED TO OPEN THE THROTTLE VALVE AND THE THROTTLE CABLE IS PULLED TO INCREASE THE VEHICLE SPEED. WHEN THE ACTUATOR DRIVING SPEED IS HIGHER THAN THE SET SPEED, THE CURRENT TO THE CRUISE CONTROL ACTUATOR FLOWS FROM **TERMINAL 11** OF THE CRUISE CONTROL ECU TO **TERMINAL 2** OF THE CRUISE CONTROL ACTUATOR **➔ TERMINAL 1 ➔ TERMINAL 12** OF THE CRUISE CONTROL ECU.
THIS CAUSES THE MOTOR IN THE CRUISE CONTROL ACTUATOR TO ROTATE TO CLOSE THE THROTTLE VALVE AND RETURN THE THROTTLE CABLE TO DECREASE THE VEHICLE SPEED.

3. COAST CONTROL

DURING THE CRUISE CONTROL DRIVING, WHILE THE COAST SW IS ON, THE CRUISE CONTROL ACTUATOR RETURNS THE THROTTLE CABLE TO CLOSE THE THROTTLE VALVE AND DECREASE THE DRIVE SPEED. THE VEHICLE SPEED WHEN THE COAST SW IS TURNED OFF IS MEMORIZED AND THE VEHICLE CONTINUES AT THE NEW SET SPEED.

4. ACCEL CONTROL

DURING THE CRUISE CONTROL DRIVING, WHILE THE ACCEL SW IS TURNED ON, THE CRUISE CONTROL ACTUATOR PULLS THE THROTTLE CABLE TO OPEN THE THROTTLE VALVE AND INCREASE THE DRIVING SPEED. THE VEHICLE SPEED WHEN THE ACCEL SW IS TURNED OFF IS MEMORIZED AND THE VEHICLE CONTINUES AT THE NEW SET SPEED.

5. RESUME CONTROL

UNLESS THE VEHICLE SPEED FALLS BELOW THE MINIMUM SPEED LIMIT (APPROX. **40** KM/H, **25** MPH) AFTER CANCELING THE SET SPEED BY THE CANCEL SW, PUSHING THE RESUME SW WILL CAUSE THE VEHICLE TO RESUME THE SPEED SET BEFORE CANCELLATION.

6. CANCEL MECHANISM

IF ANY OF THE FOLLOWING OPERATIONS OCCURS DURING CRUISE CONTROL OPERATION, THE MAGNETIC CLUTCH OF THE ACTUATOR MOTOR TURNS OFF AND THE MOTOR ROTATES TO CLOSE THE THROTTLE VALVE AND THE CRUISE CONTROL IS RELEASED.

* DEPRESSING THE BRAKE PEDAL (STOP LIGHT SW ON). “SIGNAL INPUT TO **TERMINAL 2** OF THE CRUISE CONTROL ECU” (M/T).
* DEPRESSING THE BRAKE PEDAL (STOP LIGHT SW ON). “SIGNAL INPUT TO **TERMINAL 16** OF THE CRUISE CONTROL ECU”.
* PUSH THE CANCEL SW (CANCEL SW ON). “SIGNAL INPUT TO **TERMINAL 18** OF THE CRUISE CONTROL ECU”
* PLACING THE SHIFT LEVER IN EXCEPT “D” POSITION (D POSITION SW OFF). “SIGNAL INPUT TO **TERMINAL 2** OF THE CRUISE CONTROL ECU” (A/T).

7. AUTO CANCEL FUNCTION

A) IF ANY OF THE FOLLOWING OPERATING CONDITIONS OCCURS DURING CRUISE CONTROL OPERATION, THE SET SPEED IS ERASED, CURRENT FLOW TO THE MAGNETIC CLUTCH IS STOPPED AND THE CRUISE CONTROL IS RELEASED. (MAIN SW TURNS OFF).

WHEN THIS OCCURS, THE IGNITION SW MUST BE TURNED OFF ONCE BEFORE THE MAIN SW WILL TURN ON.

* WHEN CURRENT CONTINUED TO FLOW TO THE MOTOR INSIDE THE ACTUATOR IN THE THROTTLE VALVE “OPEN” DIRECTION.
* THE MOTOR DOES NOT OPERATE DESPITE THE MOTOR DRIVE SIGNAL BEING OUTPUT.

B) IF ANY OF THE FOLLOWING OPERATING CONDITIONS OCCURS DURING CRUISE CONTROL OPERATION, THE SET SPEED IS ERASED, CURRENT FLOW TO THE MAGNETIC CLUTCH IS STOPPED AND THE CRUISE CONTROL IS RELEASED. (MAIN SW TURN OFF).

WHEN THIS OCCURS, THE CANCEL STATE IS CLEARED AS THE MAIN SW WILL TURN ON AGAIN.

* OVER CURRENT TO TRANSISTOR DRIVING THE MOTOR AND/OR THE MAGNETIC CLUTCH.
* OPEN CIRCUIT IN THE MAGNETIC CLUTCH.
* MOMENTARY INTERRUPTION OF VEHICLE SPEED SIGNAL.
* SHORT CIRCUIT IN THE CRUISE CONTROL SW.
* WHEN THE VEHICLE SPEED FALLS MORE THAN 16 KM/H (10 MPH) BELOW THE SET SPEED, E.G. ON AN UPWARD SLOPE.

C) IF ANY OF THE FOLLOWING CONDITIONS OCCURS DURING CRUISE CONTROL OPERATION, THE SET SPEED IS ERASED AND THE CRUISE CONTROL IS RELEASED. (THE POWER TO THE MAGNETIC CLUTCH IS CUT OFF UNTIL THE SET SW IS “ON” AGAIN.)

* WHEN THE VEHICLE SPEED FALLS BELOW THE MINIMUM SPEED LIMIT, APPROX. 40 KM/H (25 MPH).
* WHEN POWER TO THE CRUISE CONTROL SYSTEM IS MOMENTARY CUT OFF.

D) IF THIS OF THE FOLLOWING CONDITION OCCURS DURING CRUISE CONTROL OPERATION. THE CRUISE CONTROL IS RELEASED.

* OPEN THE CIRCUIT FROM **TERMINAL 3** TO **4** OF THE STOP LIGHT SW (STOP LIGHT SW ON).

8. AUTOMATIC TRANSAXLE CONTROL FUNCTION

* IN OVERDRIVE, IF THE VEHICLE SPEED BECOMES LOWER THAN THE OVERDRIVE CUT SPEED (SET SPEED MINUS APPROX. 4 KM/H, 2.5 MPH) DURING CRUISE CONTROL OPERATION, SUCH AS DRIVING UP A HILL, THE OVERDRIVE IS RELEASED AND THE POWER INCREASED TO PREVENT A REDUCTION IN VEHICLE SPEED.
* AFTER RELEASING THE OVERDRIVE, VEHICLE SPEED BECOMES HIGHER THAN THE OVERDRIVE RETURN SPEED (SET SPEED MINUS APPROX., 2 KM/H, 1.2 MPH) AND THE ECU JUDGES BY THE SIGNALS FROM THE ACTUATOR’S POTENTIOMETER THAT THE UPWARD SLOPE HAS FINISHED, THE OVERDRIVE IS RESUMED AFTER APPROXIMATELY 2 SECONDS.
* DURING CRUISE CONTROL DRIVING, THE CRUISE CONTROL OPERATION SIGNAL IS OUTPUT FROM THE CRUISE CONTROL ECU TO THE ENGINE CONTROL MODULE. UPON RECEIVING THIS SIGNAL, THE ENGINE CONTROL MODULE CHANGES THE SHIFT PATTERN TO NORMAL.
  TO MAINTAIN SMOOTH CRUISE CONTROL OPERATION (ON A DOWNWARD SLOPE ETC.), THE LOCK–UP RELEASE OF THE TRANSAXLE WHEN THE IDLING POINT OF THE THROTTLE POSITION IS “ON” IS FORBIDDEN.

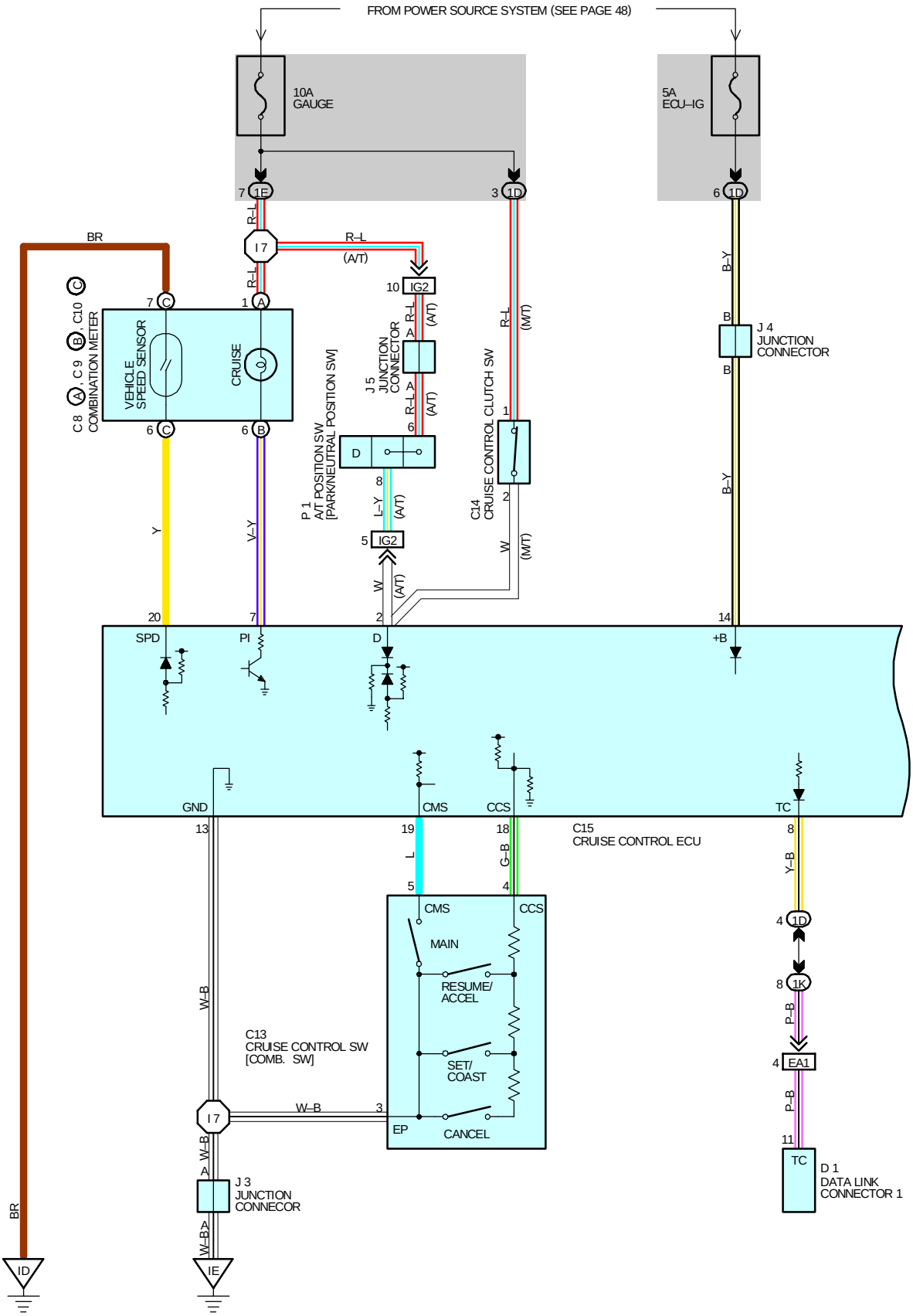
FROM POWER SOURCE SYSTEM (SEE PAGE 48)
10A GAUGE
5A ECU–IG
7 1E
3 1D
6 1D
R–L
I 7
R–L (A/T)
10 IG2
R–L (A/T)
R–L (M/T)
B–Y
BR
C 8, C 9, C10 COMBINATION METER
VEHICLE SPEED SENSOR
CRUISE
7 C
1 A
6 C
6 B
J 5 JUNCTION CONNECTOR
A
6
J 4 JUNCTION CONNECTOR
B
P 1 A/T POSITION SW [PARK/NEUTRAL POSITION SW]
D
8
L–Y (A/T)
5 IG2
C14 CRUISE CONTROL CLUTCH SW
1
2
W (M/T)
W (A/T)
Y
V–Y
20
7
2
14
SPD
PI
D
+B
GND
CMS
CCS
TC
13
19
18
8
C15 CRUISE CONTROL ECU
L
G–B
Y–B
5
4
4 1D
8 1K
P–B
4 EA1
P–B
11
TC
D 1 DATA LINK CONNECTOR 1
CMS
CCS
MAIN
RESUME/ ACCEL
SET/ COAST
CANCEL
EP
C13 CRUISE CONTROL SW [COMB. SW]
W–B
I 7
W–B
3
W–B
A
J 3 JUNCTION CONNECOR
W–B
B
BR
ID
IE

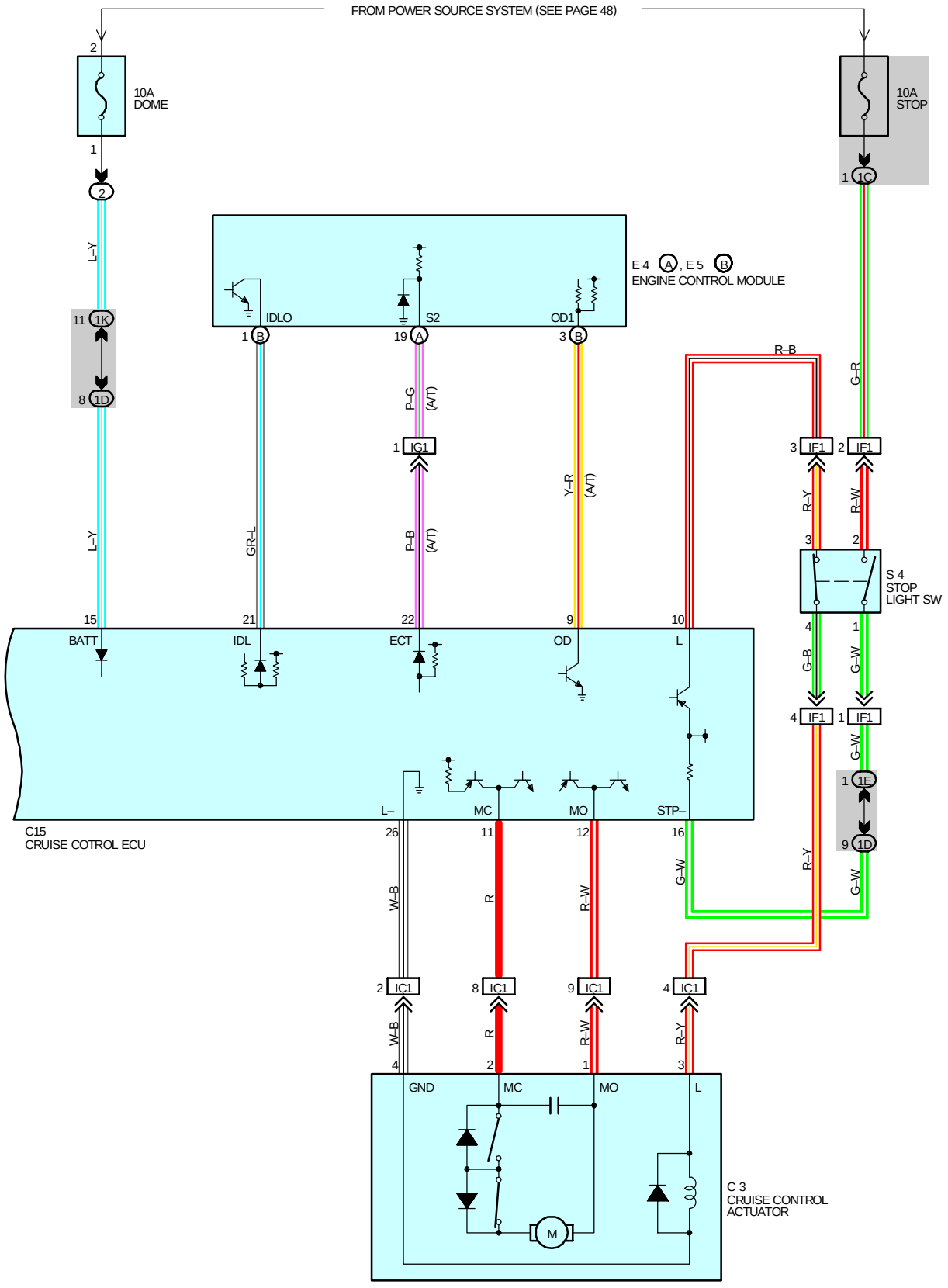
FROM POWER SOURCE SYSTEM (SEE PAGE 48)
10A
DOME
10A
STOP
E 4 A , E 5 B
ENGINE CONTROL MODULE
IDLO
S2
OD1
S 4
STOP
LIGHT SW
C15
CRUISE COTROL ECU
BATT
IDL
ECT
OD
L
L–
MC
MO
STP–
GND
C 3
CRUISE CONTROL
ACTUATOR
M

SERVICE HINTS

C 3 CRUISE CONTROL ACTUATOR

3–4 : APPROX. 38 Ω

C13 CRUISE CONTROL SW [COMB. SW]

5–3 : CONTINUITY WITH THE MAIN SW ON
4–3 : APPROX. 418 Ω WITH THE CANCEL SW ON
APPROX. 198 Ω WITH THE SET/COAST SW ON
APPROX. 68 Ω WITH THE RESUME/ACCEL SW ON

C15 CRUISE CONTROL ECU

14–GROUND : APPROX. 12 VOLTS WITH THE IGNITION SW AT ON POSITION
15–GROUND : ALWAYS APPROX. 12 VOLTS
20–GROUND : 4 PULSES WITH 1 ROTATION OF THE ROTOR SHAFT
18–GROUND : APPROX. 418 Ω WITH THE CANCEL SW ON IN THE CRUISE CONTROL SW
APPROX. 198 Ω WITH THE SET/COAST SW ON IN THE CRUISE CONTROL SW
APPROX. 68 Ω WITH THE RESUME/ACCEL SW ON IN THE CRUISE CONTROL SW
13–GROUND: ALWAYS CONTINUITY

: PARTS LOCATION

CODE		SEE PAGE	CODE		SEE PAGE	CODE	SEE PAGE
C 3		24	C14		26	J 3	27
C 8	A	26	C15		26	J 4	27
C 9	B	26	D 1		24	J 5	27
C10	C	26	E 4	A	26	P 1	25
C13		26	E 5	B	26	S 4	27

: RELAY BLOCKS

CODE	SEE PAGE	RELAY BLOCKS (RELAY BLOCK LOCATION)
2	22	ENGINE ROOM R/B (ENGINE COMPARTMENT LEFT)

: JUNCTION BLOCK AND WIRE HARNESS CONNECTOR

CODE	SEE PAGE	JUNCTION BLOCK AND WIRE HARNESS (CONNECTOR LOCATION)
1C	20	INSTRUMENT PANEL WIRE AND DRIVER SIDE J/B (LEFT KICK PANEL)
1D		
1E		
1K	20	ENGINE ROOM MAIN WIRE AND DRIVER SIDE J/B (LEFT KICK PANEL)

: CONNECTOR JOINING WIRE HARNESS AND WIRE HARNESS

CODE	SEE PAGE	JOINING WIRE HARNESS AND WIRE HARNESS (CONNECTOR LOCATION)
EA1	30	ENGINE WIRE AND ENGINE ROOM MAIN WIRE (INSIDE OF THE ENGINE ROOM R/B)
IC1	32	INSTRUMENT PANEL WIRE AND ENGINE ROOM MAIN WIRE (LEFT KICK PANEL)
IF1	34	INSTRUMENT PANEL WIRE AND SWITCH WIRE (NEAR THE STEERING COLUMN)
IG1	34	ENGINE WIRE AND INSTRUMENT PANEL WIRE (NEAR THE BLOWER UNIT)
IG2		

: GROUND POINTS

CODE	SEE PAGE	GROUND POINTS LOCATION
ID	32	LEFT KICK PANEL
IE	32	INSTRUMENT PANEL BRACE LH

: SPLICE POINTS

CODE	SEE PAGE	WIRE HARNESS WITH SPLICE POINTS	CODE	SEE PAGE	WIRE HARNESS WITH SPLICE POINTS
I 7	34	INSTRUMENT PANEL WIRE			

C 3 BLACK

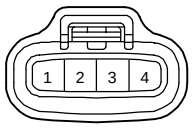

C 8 (A) BROWN

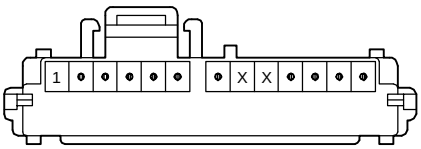

C 9 (B)

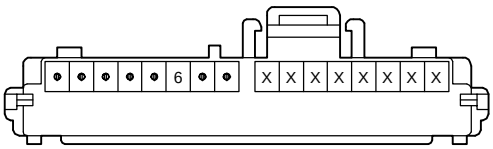

C10 (C) GRAY

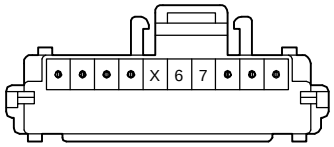

(USA, CANADA W/ AIRBAG) C13 BLACK

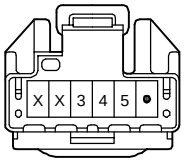

(CANADA W/O AIRBAG) C13 BLACK

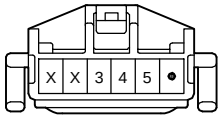

C14

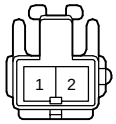

C15 GREEN

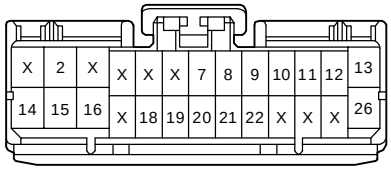

D 1 BLACK

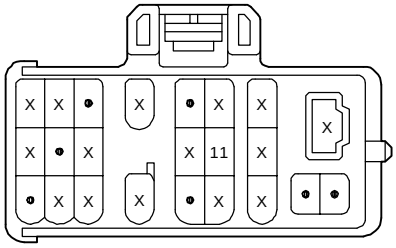

(A/T) E 4 (A)

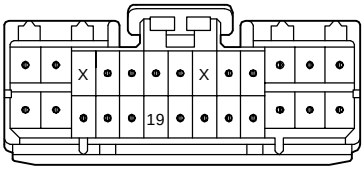

E 5 (B)

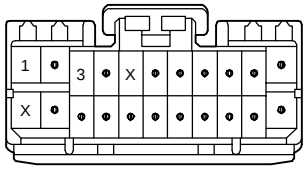

J 3 BLUE

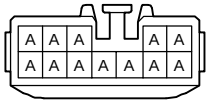

(HINT : SEE PAGE 7)

J 4 GRAY

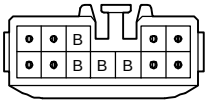

(HINT : SEE PAGE 7)

J 5 GRAY

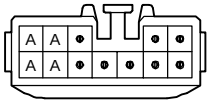

(HINT : SEE PAGE 7)

P 1 GRAY

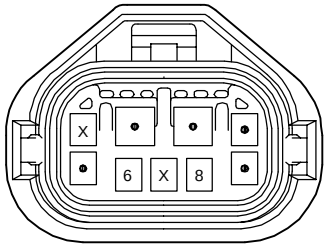

S 4

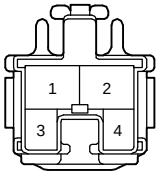

*1 : CANADA

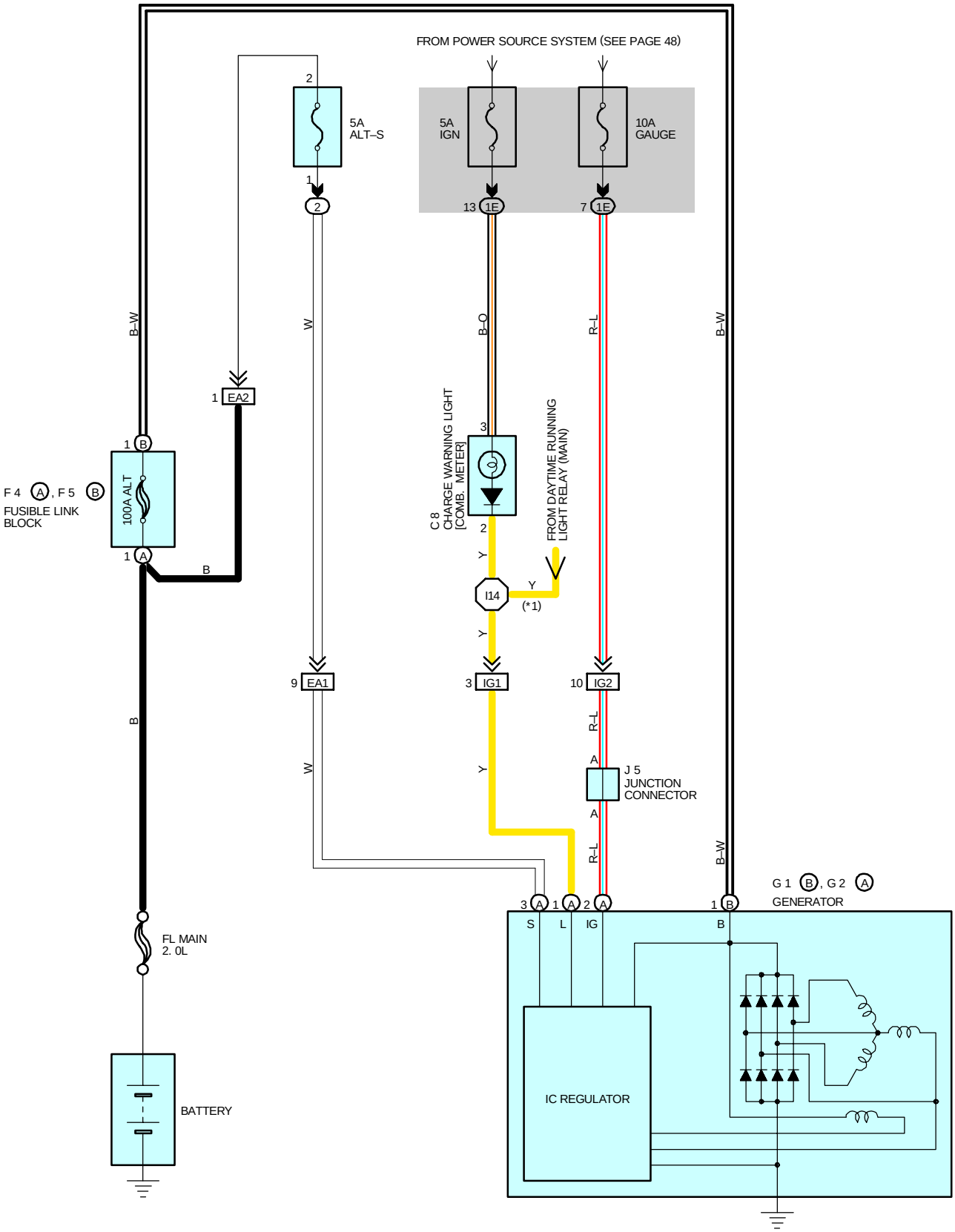
FROM POWER SOURCE SYSTEM (SEE PAGE 48)
5A
ALT–S
5A
IGN
10A
GAUGE
2
1
13 1E
7 1E
B–W
W
B–O
R–L
B–W
1 EA2
1 B
F 4 A , F 5 B
FUSIBLE LINK
BLOCK
100A ALT
1 A
B
C 8
CHARGE WARNING LIGHT
[COMB. METER]
3
2
Y
I14
Y
(*1)
FROM DAYTIME RUNNING
LIGHT RELAY (MAIN)
9 EA1
3 IG1
10 IG2
R–L
A
J 5
JUNCTION
CONNECTOR
A
B
W
Y
R–L
B–W
FL MAIN
2. 0L
G 1 B , G 2 A
GENERATOR
3 A 1 A 2 A
1 B
S
L
IG
B
IC REGULATOR
BATTERY

SERVICE HINTS

G2 (A) GENERATOR

(A) 1–GROUND : **13.9–15.1** VOLTS WITH ENGINE RUNNING AT **2000** RPM AND **25**°C(**77**°F)
13.5–14.3 VOLTS WITH ENGINE RUNNING AT **2000** RPM AND **115**°C(**239**°F)
(A) 2–GROUND : **0–4** VOLTS WITH THE IGNITION SW AT **ON** POSITION AND ENGINE NOT RUNNING

○ : PARTS LOCATION

CODE		SEE PAGE	CODE		SEE PAGE	CODE		SEE PAGE
C8		26	F5	B	24	G2	A	24
F4	A	24	G1	B	24	J5		27

⬭ : RELAY BLOCKS

CODE	SEE PAGE	RELAY BLOCKS (RELAY BLOCK LOCATION)
2	22	ENGINE ROOM R/B (ENGINE COMPARTMENT LEFT)

⬭ : JUNCTION BLOCK AND WIRE HARNESS CONNECTOR

CODE	SEE PAGE	JUNCTION BLOCK AND WIRE HARNESS (CONNECTOR LOCATION)
1E	20	INSTRUMENT PANEL WIRE AND DRIVER SIDE J/B (LEFT KICK PANEL)

▭ : CONNECTOR JOINING WIRE HARNESS AND WIRE HARNESS

CODE	SEE PAGE	JOINING WIRE HARNESS AND WIRE HARNESS (CONNECTOR LOCATION)
EA1	30	ENGINE WIRE AND ENGINE ROOM MAIN WIRE (INSIDE OF THE ENGINE ROOM R/B)
EA2		
IG1	34	ENGINE WIRE AND INSTRUMENT PANEL WIRE (NEAR THE BLOWER UNIT)
IG2		

⯃ : SPLICE POINTS

CODE	SEE PAGE	WIRE HARNESS WITH SPLICE POINTS	CODE	SEE PAGE	WIRE HARNESS WITH SPLICE POINTS
I14	34	INSTRUMENT PANEL WIRE			

C 8 BROWN

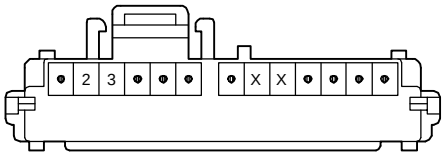

F 4 (A), F 5 (B)

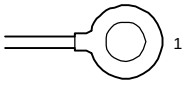

G 1 (B)

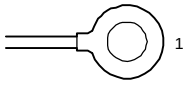

G 2 (A) BLACK

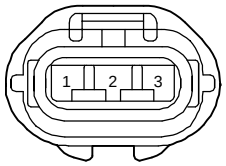

J 5 GRAY

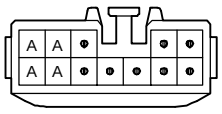

(HINT : SEE PAGE 7)

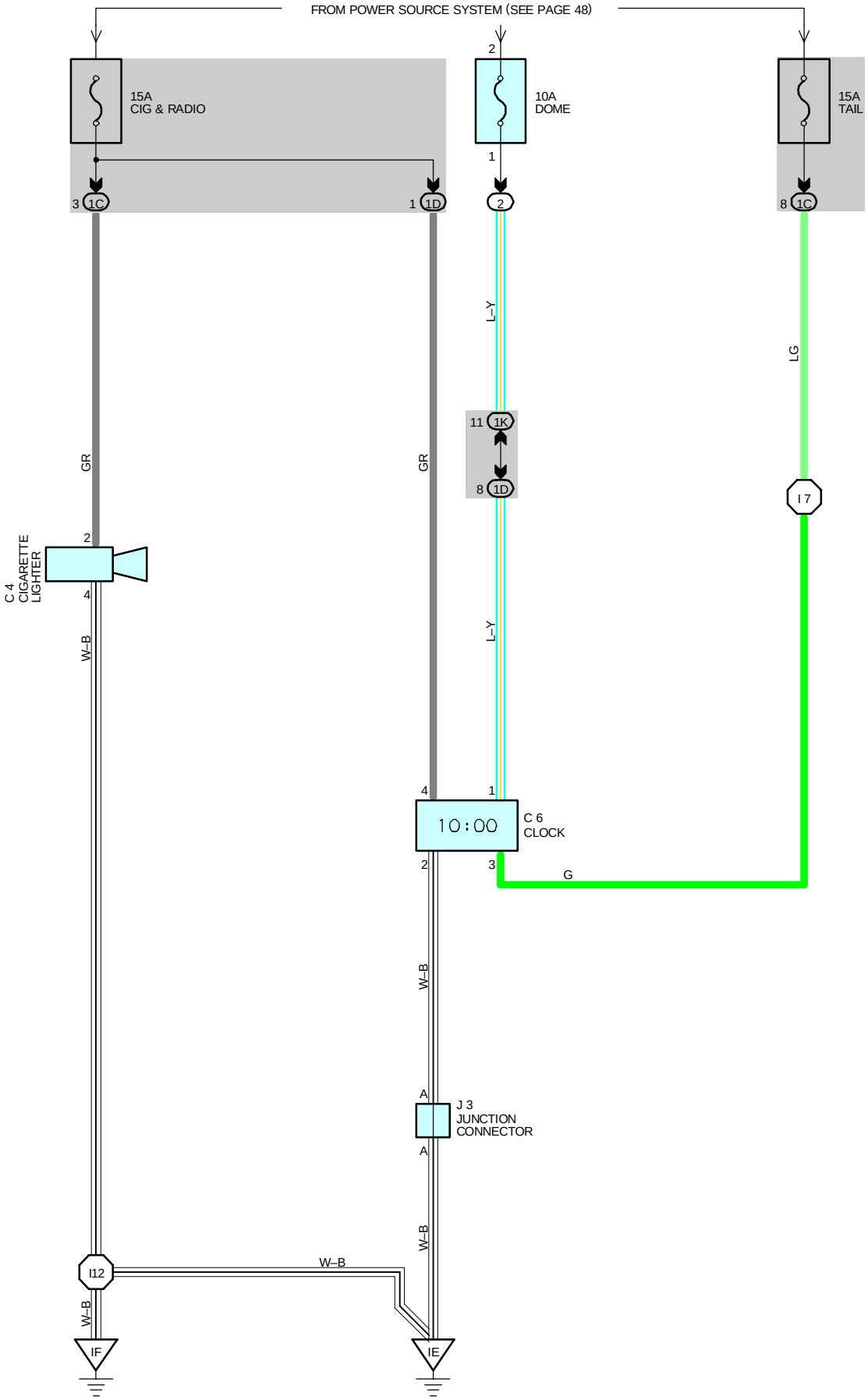
FROM POWER SOURCE SYSTEM (SEE PAGE 48)
15A
CIG & RADIO
10A
DOME
15A
TAIL
3 1C
1 1D
2
1
2
8 1C
L–Y
LG
11 1K
8 1D
GR
GR
I 7
2
C 4
CIGARETTE
LIGHTER
4
W–B
L–Y
4
1
10:00
C 6
CLOCK
2
3
G
W–B
A
J 3
JUNCTION
CONNECTOR
A
W–B
I12
W–B
W–B
IF
IE

SERVICE HINTS

C 4 CIGARETTE LIGHTER
2–GROUND : APPROX. **12** VOLTS WITH THE IGNITION SW AT **ACC** OR **ON** POSITION
4–GROUND : ALWAYS CONTINUITY
C 6 CLOCK
1–GROUND : ALWAYS APPROX. **12** VOLTS
4–GROUND : APPROX. **12** VOLTS WITH THE IGNITION SW AT **ACC** OR **ON** POSITION
3–GROUND : APPROX. **12** VOLTS WITH THE LIGHT CONTROL SW AT **TAIL** OR **HEAD** POSITION
2–GROUND : ALWAYS CONTINUITY

: PARTS LOCATION

CODE	SEE PAGE	CODE	SEE PAGE	CODE	SEE PAGE
C 4	26	C 6	26	J 3	27

: RELAY BLOCKS

CODE	SEE PAGE	RELAY BLOCKS (RELAY BLOCK LOCATION)
2	22	ENGINE ROOM R/B (ENGINE COMPARTMENT LEFT)

: JUNCTION BLOCK AND WIRE HARNESS CONNECTOR

CODE	SEE PAGE	JUNCTION BLOCK AND WIRE HARNESS (CONNECTOR LOCATION)
1C	20	INSTRUMENT PANEL WIRE AND DRIVER SIDE J/B (LEFT KICK PANEL)
1D		
1K	20	ENGINE ROOM MAIN WIRE AND DRIVER SIDE J/B (LEFT KICK PANEL)

: GROUND POINTS

CODE	SEE PAGE	GROUND POINTS LOCATION
IE	32	INSTRUMENT PANEL BRACE LH
IF	32	RIGHT KICK PANEL

: SPLICE POINTS

CODE	SEE PAGE	WIRE HARNESS WITH SPLICE POINTS	CODE	SEE PAGE	WIRE HARNESS WITH SPLICE POINTS
I 7	34	INSTRUMNET PANEL WIRE	I12	34	INSTRUMENT PANEL WIRE

C 4 BLUE



C 6 BLACK

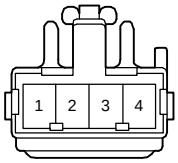

J 3 BLUE

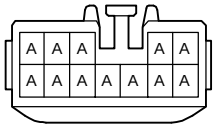

(HINT : SEE PAGE 7)

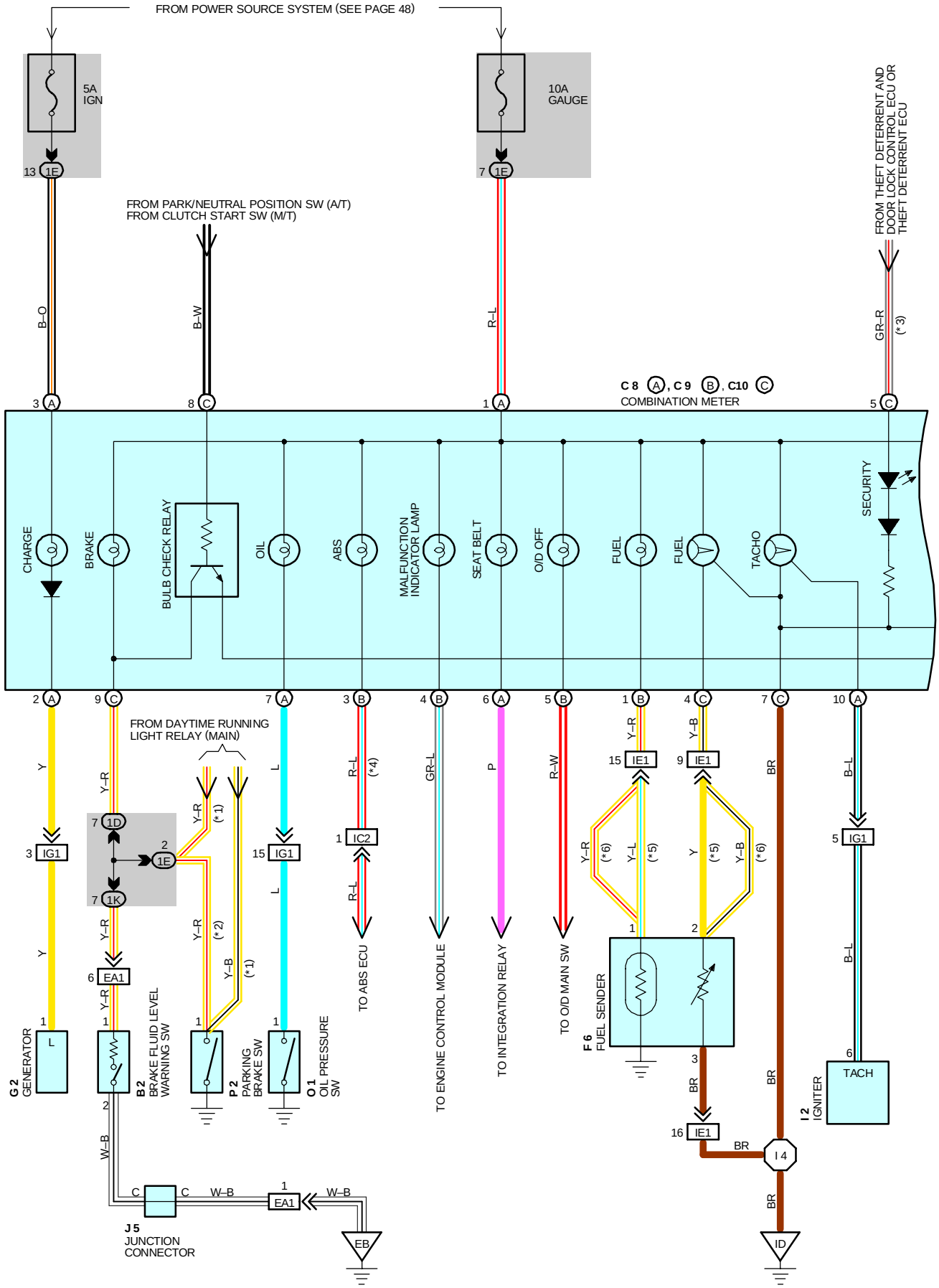
FROM POWER SOURCE SYSTEM (SEE PAGE 48)
5A IGN
10A GAUGE
FROM THEFT DETERRENT AND DOOR LOCK CONTROL ECU OR THEFT DETERRENT ECU
FROM PARK/NEUTRAL POSITION SW (A/T)
FROM CLUTCH START SW (M/T)
C8 (A), C9 (B), C10 (C)
COMBINATION METER
CHARGE
BRAKE
BULB CHECK RELAY
OIL
ABS
MALFUNCTION INDICATOR LAMP
SEAT BELT
O/D OFF
FUEL
FUEL
TACHO
SECURITY
FROM DAYTIME RUNNING LIGHT RELAY (MAIN)
TO ABS ECU
TO ENGINE CONTROL MODULE
TO INTEGRATION RELAY
TO O/D MAIN SW
F6 FUEL SENDER
G2 GENERATOR
B2 BRAKE FLUID LEVEL WARNING SW
P2 PARKING BRAKE SW
O1 OIL PRESSURE SW
J5 JUNCTION CONNECTOR
I2 IGNITER
TACH
EB
ID
I4

*1 : CANADA
*2 : EXCEPT CANADA
*3 : PUERTO RICO
*4 : EXCEPT PUERTO RICO
*5 : CONVERTIBLE
*6 : C/P

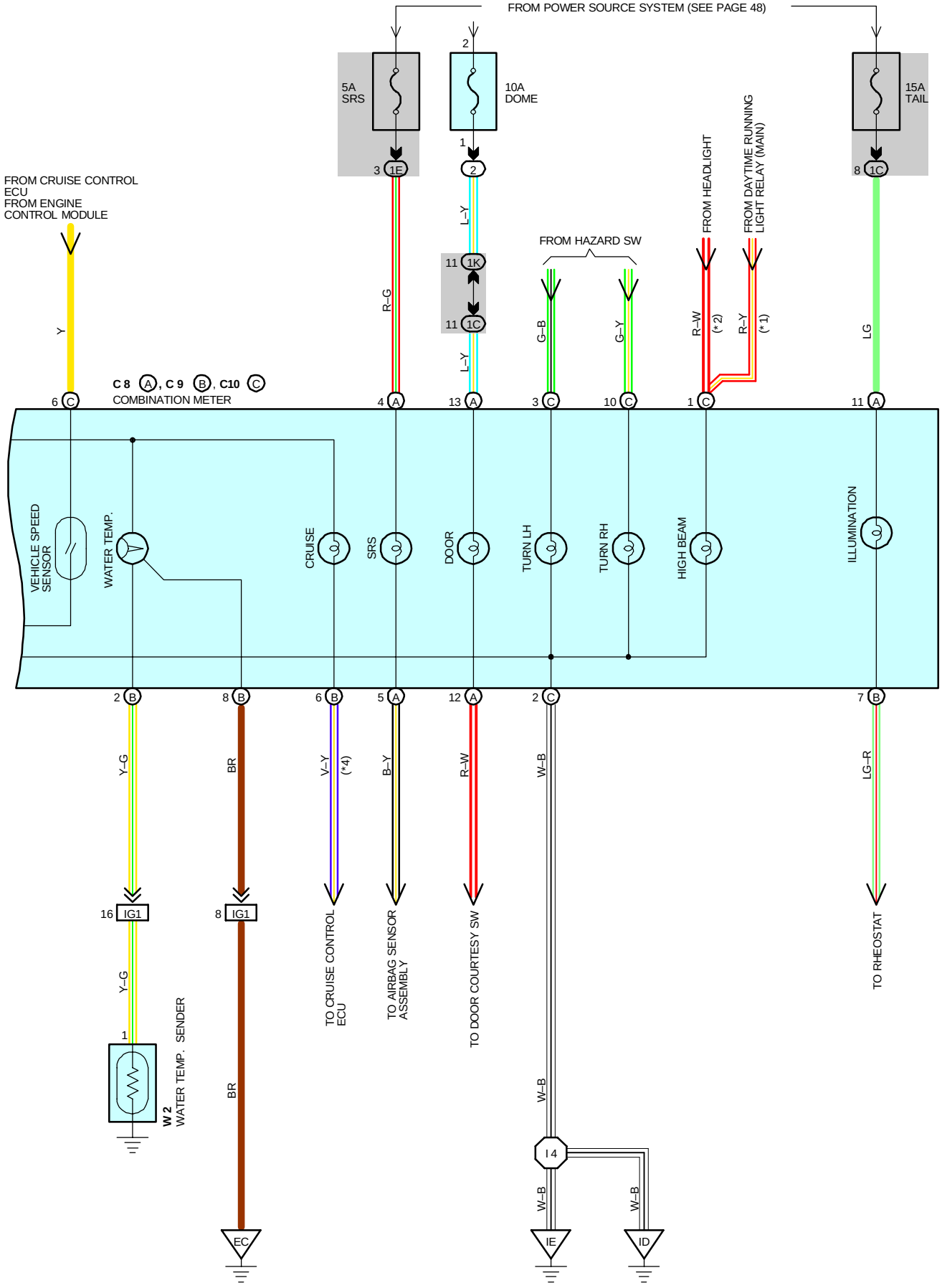

COMBINATION METER

SERVICE HINTS

B 2 BRAKE FLUID LEVEL WARNING SW

1–2 : CLOSED WITH THE FLOAT DOWN

C 8 (A), C 9 (B), C10 (C) COMBINATION METER

(A) 1–GROUND : APPROX. **12** VOLTS WITH THE IGNITION SW AT **ON** POSITION
(A) 13–GROUND : APPROX. **12** VOLTS
(A) 11–GROUND : APPROX. **12** VOLTS WITH THE LIGHT CONTROL SW AT **TAIL** OR **HEAD** POSITION
(B) 8, (C) 2, (C) 7–GROUND : ALWAYS CONTINUITY

F 6 FUEL SENDER

2–3 : APPROX. **7** Ω WITH THE FUEL FULL
APPROX. **95** Ω WITH THE FUEL EMPTY

O 1 OIL PRESSURE SW

1–GROUND : CLOSED WITH THE OIL PRESSURE BELOW **19.61** KPA (**0.2** KGF/CM^2, **2.84** PSI)

P 2 PARKING BRAKE SW

1–GROUND : CLOSED WITH THE PARKING BRAKE LEVER PULLED UP

: PARTS LOCATION

CODE		SEE PAGE	CODE	SEE PAGE	CODE	SEE PAGE
B 2		24	**F 6**	28 (C/P), 29 (CONVERTIBLE)	**O 1**	25
C 8	A	26	**G 2**	24	**P 2**	27
C 9	B	26	**I 2**	25	**W 2**	25
C 10	C	26	**J 5**	27		

: RELAY BLOCKS

CODE	SEE PAGE	RELAY BLOCKS (RELAY BLOCK LOCATION)
2	22	ENGINE ROOM R/B (ENGINE COMPARTMENT LEFT)

: JUNCTION BLOCK AND WIRE HARNESS CONNECTOR

CODE	SEE PAGE	JUNCTION BLOCK AND WIRE HARNESS (CONNECTOR LOCATION)
1 C	20	INSTRUMENT PANEL WIRE AND DRIVER SIDE J/B (LEFT KICK PANEL)
1 D		
1 E		
1 K	20	ENGINE ROOM MAIN AND DRIVER SIDE J/B (LEFT KICK PANEL)

: CONNECTOR JOINING WIRE HARNESS AND WIRE HARNESS

CODE	SEE PAGE	JOINING WIRE HARNESS AND WIRE HARNESS (CONNECTOR LOCATION)
EA1	30	ENGINE WIRE AND ENGINE ROOM MAIN WIRE (INSIDE OF THE ENGINE ROOM R/B)
IC2	32	INSTRUMENT PANEL WIRE AND ENGINE ROOM MAIN WIRE (LEFT KICK PANEL)
IE1	32	INSTRUMENT PANEL WIRE AND FLOOR WIRE (LEFT KICK PANEL)
IG1	34	ENGINE WIRE AND INSTRUMENT PANEL WIRE (NEAR THE BLOWER UNIT)

: GROUND POINTS

CODE	SEE PAGE	GROUND POINTS LOCATION
EB	30	FRONT SIDE OF THE LEFT FENDER
EC	30	RIGHT SIDE OF THE SURGE TANK
ID	32	LEFT KICK PANEL
IE	32	INSTRUMENT PANEL BRACE LH

: SPLICE POINTS

CODE	SEE PAGE	WIRE HARNESS WITH SPLICE POINTS	CODE	SEE PAGE	WIRE HARNESS WITH SPLICE POINTS
I 4	34	INSTRUMENT PANEL WIRE			

B 2 GRAY



C 8 (A) BROWN

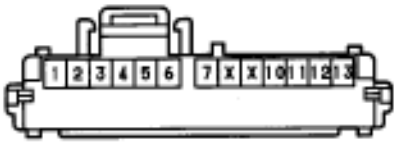

(USA, CANADA) C 9 (B)

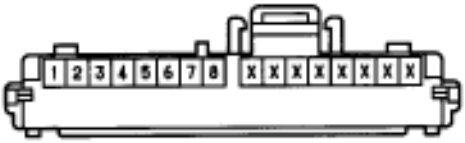

(PUERTO RICO) C 9 (B)

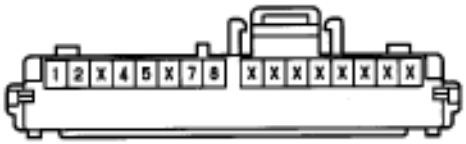

(USA, CANADA) C10 (C) GRAY

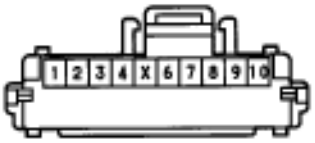

(PUERTO RICO) C10 (C) GRAY

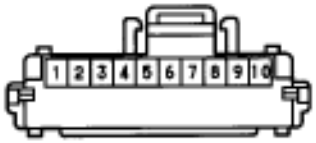

F 6 DARK GRAY



G 2 BLACK



I 2 BLACK

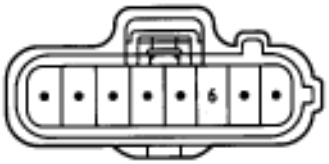

J 5 GRAY



(HINT:SEE PAGE 7)

O 1 GRAY



P 2 BLACK



W 2 GRAY



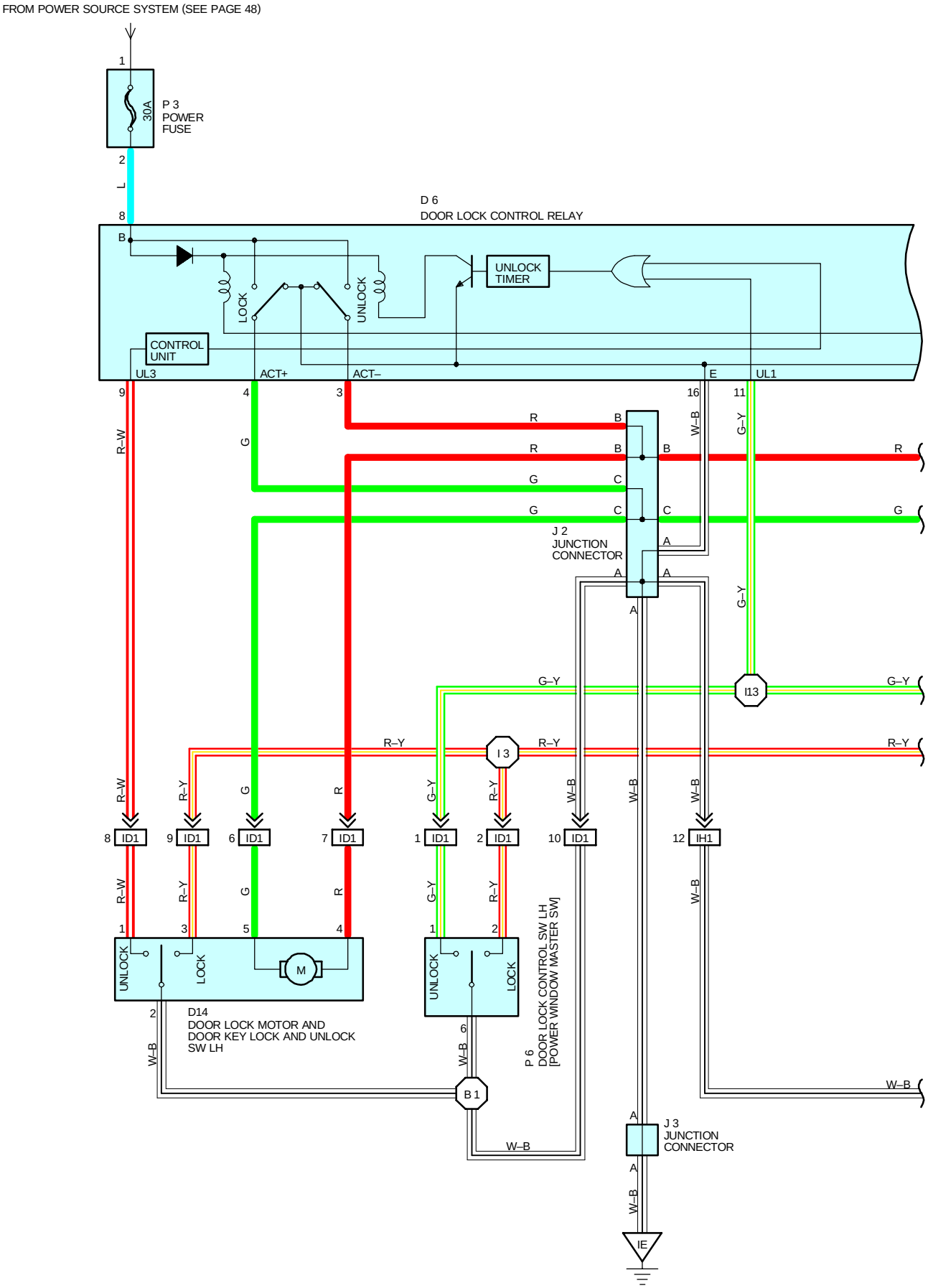
FROM POWER SOURCE SYSTEM (SEE PAGE 48)
P 3
POWER
FUSE
30A
D 6
DOOR LOCK CONTROL RELAY
UNLOCK
TIMER
LOCK
UNLOCK
CONTROL
UNIT
UL3
ACT+
ACT–
E
UL1
J 2
JUNCTION
CONNECTOR
I13
I 3
ID1
IH1
M
D14
DOOR LOCK MOTOR AND
DOOR KEY LOCK AND UNLOCK
SW LH
P 6
DOOR LOCK CONTROL SW LH
[POWER WINDOW MASTER SW]
B 1
J 3
JUNCTION
CONNECTOR
IE

(w/o) THEFT DETERRENT SYSTEM

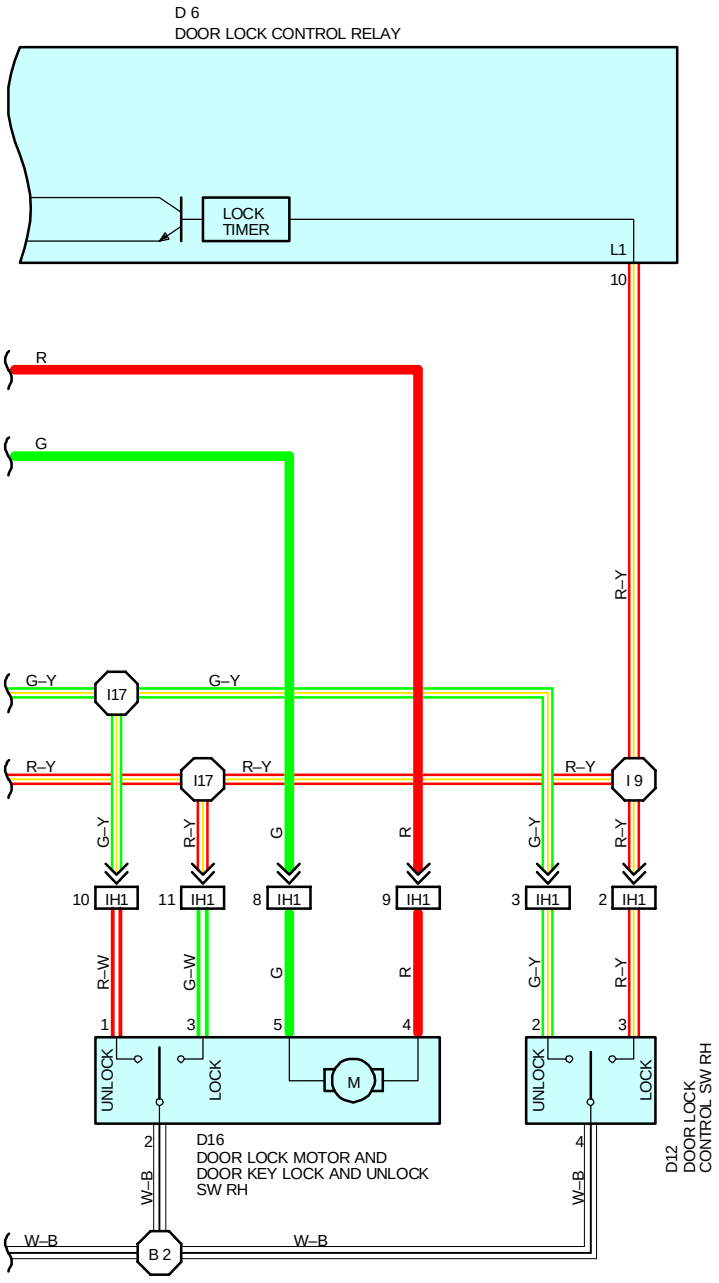

DOOR LOCK CONTROL

SYSTEM OUTLINE

CURRENT ALWAYS FLOWS TO **TERMINAL 8** OF THE DOOR LOCK CONTROL RELAY THROUGH THE **POWER** FUSE

1. MANUAL LOCK OPERATION

TO CHANGE THE DOOR LOCK CONTROL SW OR DOOR KEY LOCK AND UNLOCK SW TO THE **LOCK** POSITION, A LOCK SIGNAL IS INPUT TO **TERMINAL 10** OF THE DOOR LOCK CONTROL RELAY AND CAUSES THE RELAY TO FUNCTION. THE CURRENT FLOWS FROM THE **TERMINAL 8** OF THE DOOR LOCK CONTROL RELAY TO **TERMINAL 4** → **TERMINAL 5** OF THE DOOR LOCK MOTOR AND DOOR KEY LOCK AND UNLOCK SW LH, RH → **TERMINALS 4** → **TERMINAL 3** OF THE DOOR LOCK CONTROL RELAY → **TERMINAL 16** → **GROUND** AND THE DOOR LOCK MOTOR CAUSES THE DOOR TO LOCK.

2. MANUAL UNLOCK OPERATION

TO CHANGE THE DOOR LOCK CONTROL SW OR DOOR KEY LOCK AND UNLOCK SW TO THE **UNLOCK** POSITION, AN UNLOCK SIGNAL IS INPUT TO **TERMINAL 11** OF THE DOOR LOCK CONTROL RELAY AND CAUSES THE RELAY TO FUNCTION.

THE CURRENT FLOWS FROM **TERMINAL 8** OF THE DOOR LOCK CONTROL RELAY TO RELAY **TERMINAL 3** → **TERMINAL 4** OF THE DOOR LOCK MOTOR AND DOOR KEY LOCK AND UNLOCK SW LH, RH → **TERMINAL 5** → **TERMINAL 4** OF THE DOOR LOCK CONTROL RELAY → **TERMINAL 16** → **GROUND** AND THE DOOR LOCK MOTOR CAUSES THE DOOR TO UNLOCK.

3. DOUBLE OPERATION UNLOCK OPERATION

WHEN THE DOOR KEY AND UNLOCK SW LH IS TURNED TO THE UNLOCK SIDE, ONLY THE DRIVER'S DOOR IS MECHANICALLY UNLOCKED. TURNING THE DOOR KEY LOCK AND UNLOCK SW LH TO THE UNLOCK SIDE CAUSES A SIGNAL TO BE INPUT TO **TERMINAL 9** OF THE DOOR LOCK CONTROL RELAY, AND IF THE SIGNAL INPUT WITHIN 3 SECONDS BY TURNING THE SW TO THE UNLOCK SIDE AGAIN, THE CURRENT FLOWS FROM **TERMINAL 8** OF THE DOOR LOCK CONTROL RELAY TO **TERMINAL 3** → **TERMINALS 4** OF THE DOOR LOCK MOTOR AND DOOR KEY LOCK AND UNLOCK SW LH, RH → **TERMINALS 5** → **TERMINAL 4** OF THE DOOR LOCK CONTROL RELAY → **TERMINAL 16** → **GROUND** AND THE DOOR LOCK MOTOR CAUSES THE DOORS TO UNLOCK.

SERVICE HINTS

D 6 DOOR LOCK CONTROL RELAY

8–GROUND : ALWAYS APPROX. 12 VOLTS
16–GROUND : ALWAYS CONTINUITY
4–GROUND : APPROX. 12 VOLTS 0.2 SECONDS WITH FOLLOWING OPERATION
THE DOOR LOCK CONTROL SW LOCKED
THE DOOR KEY CYLINDER LOCKED WITH THE KEY
3–GROUND : APPROX.12 VOLTS 0.2 SECONDS WITH FOLLOWING OPERATION
THE DOOR LOCK CONTROL SW UNLOCKED
THE DOOR KEY CYLINDER UNLOCK WITH THE KEY
9–GROUND : APPROX. CONTINUITY VOLTS WITH THE DRIVER'S DOOR KEY CYCLINDER UNLOCK WITH THE KEY
10–GROUND : APPROX. CONTINUITY VOLTS WITH THE DOOR LOCK CONTROL SW OR THE DOOR KEY LOCK AND UNLOCK SW LOCKED
11–GROUND : APPROX. CONTINUITY VOLTS WITH THE DOOR LOCK CONTROL SW OR THE DOOR KEY LOCK AND UNLOCK SW UNLOCKED

○ : PARTS LOCATION

CODE	SEE PAGE	CODE	SEE PAGE	CODE	SEE PAGE
D 6	26	D16	28(C/P),29(CONVERTIBLE)	P 3	27
D12	28(C/P),29(CONVERTIBLE)	J 2	27	P 6	28(C/P),29(CONVERTIBLE)
D14	28(C/P),29(CONVERTIBLE)	J 3	27		

□ : CONNECTOR JOINING WIRE HARNESS AND WIRE HARNESS

CODE	SEE PAGE	JOINING WIRE HARNESS AND WIRE HARNESS (CONNECTOR LOCATION)
ID1	32	FRONT DOOR LH WIRE AND INSTRUMENT PANEL WIRE (LEFT KICK PANEL)
IH1	34	FRONT DOOR RH WIRE AND INSTRUMENT PANEL WIRE (RIGHT KICK PANEL)

▽ : GROUND POINTS

CODE	SEE PAGE	GROUND POINTS LOCATION
IE	32	INSTRUMENT PANEL BRACE LH

(w/o) THEFT DETERRENT SYSTEM

: SPLICE POINTS

CODE	SEE PAGE	WIRE HARNESS WITH SPLICE POINTS	CODE	SEE PAGE	WIRE HARNESS WITH SPLICE POINTS
I 3	34	INSTRUMENT PANEL WIRE	B 1	36(C/P)	FRONT DOOR LH WIRE
I 9				37(CONVERTIBLE)	
I13			B 2	36(C/P)	FRONT DOOR RH WIRE
I17				37(CONVERTIBLE)	

D 6 ORANGE

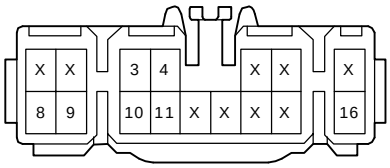

D12

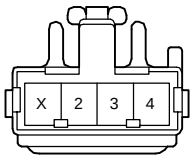

D14

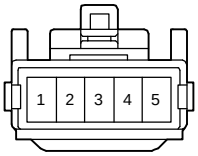

D16

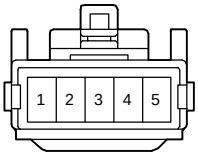

J 2 GRAY

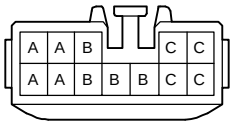

(HINT : SEE PAGE 7)

J 3 BLUE

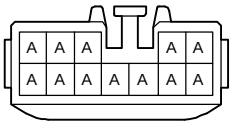

(HINT : SEE PAGE 7)

P 3

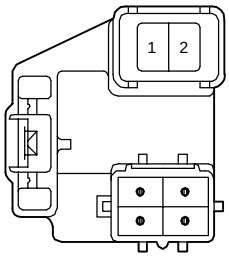

P 6

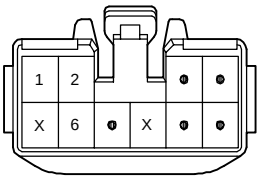

SYSTEM OUTLINE

THE ENGINE CONTROL SYSTEM UTILIZES A MICROCOMPUTER AND MAINTAINS OVERALL CONTROL OF THE ENGINE. AN OUTLINE OF ENGINE CONTROL IS GIVEN HERE.

1. INPUT SIGNALS

(1) ENGINE COOLANT TEMP. SIGNAL SYSTEM
THE ENGINE COOLANT TEMP., SENSOR DETECTS THE ENGINE COOLANT TEMP. AND HAS A BUILT–IN THERMISTOR WITH A RESISTANCE WHICH VARIES ACCORDING TO THE ENGINE COOLANT TEMP. THUS THE ENGINE COOLANT TEMP. IS INPUT AS A CONTROL SIGNAL TO **TERMINAL THW** OF THE ENGINE CONTROL MODULE.

(2) INTAKE AIR TEMP. SIGNAL SYSTEM
THE INTAKE AIR TEMP. SENSOR IS DETECTS THE INTAKE AIR TEMP., WHICH IS INPUT AS A CONTROL SIGNAL TO **TERMINAL THA** OF THE ENGINE CONTROL MODULE.

(3) OXYGEN SENSOR SIGNAL SYSTEM
THE HEATED OXYGEN DENSITY IN THE EXHAUST EMISSIONS IS DETECTS AND INPUT AS A CONTROL SIGNALS TO **TERMINALS OX1, OX2** OF THE ENGINE CONTROL MODULE.

(4) RPM SIGNAL SYSTEM
CRANKSHAFT POSITION IS DETECTED BY THE CRANKSHAFT POSITION SENSOR CRANKSHAFT POSITION IS INPUT AS A CONTROL SIGNAL TO **TERMINAL NE** OF THE ENGINE CONTROL MODULE.

(5) THROTTLE SIGNAL SYSTEM
THE THROTTLE POSITION SENSOR DETECTS THE THROTTLE VALVE OPENING ANGLE, WHICH IS INPUT AS A CONTROL SIGNAL TO **TERMINAL VTA** OF THE ENGINE CONTROL MODULE, OR WHEN THE VALVE IS FULLY CLOSED, TO **TERMIANL IDL**.

(6) VEHICLE SPEED SIGNAL SYSTEM
THE VEHICLE SPEED SENSOR INSTALLED INSIDE THE COMBINATION METER, DETECTS THE VEHICLE SPEED AND INPUTS A CONTROL SIGNAL TO **TERMINAL SPD** OF THE ENGINE CONTROL MODULE.

(7) PARK/NEUTRAL POSITION SW SIGNAL SYSTEM
THE PARK/NEUTRAL POSITION SW DETECTS WHETHER THE SHIFT POSITION IS IN NEUTRAL OR NOT, AND INPUTS A CONTROL SIGNAL TO **TERMIANL NSW** OF THE ENGINE CONTROL MODULE.

(8) A/C SIGNAL SYSTEM
THE OPERATING VOLTAGE OF THE A/C MAGNETIC CLUTCH IS DETECTED AND INPUT IN THE FORM OF A CONTROL SIGNAL TO **TERMINAL AC1** OF THE ENGINE CONTROL MODULE.

(9) BATTERY SIGNAL SYSTEM
VOLTAGE IS CONSTANTLY APPLIED TO **TERMINAL BATT** OF THE ENGINE CONTROL MODULE. WHEN THE IGNITION SW IS TURNED TO ON, VOLTAGE FOR ENGINE CONTROL MODULE OPERATION IS APPLIED VIA THE EFI RELAY TO **TERMINAL +B** OF THE ENGINE CONTROL MODULE.

(10) INTAKE AIR VOLUME SIGNAL SYSTEM
INTAKE AIR VOLUME IS DETECTED BY THE MANIFOLD ABSOLUTE PRESSURE SENSOR AND IS INPUT AS A CONTROL SIGNAL TO **TERMINAL PIM** OF THE ENGINE CONTROL MODULE.

(11) STARTER SIGNAL SYSTEM
TO CONFIRM THAT THE ENGINE IS CRANKING, THE VOLTAGE APPLIED TO THE STARTER MOTOR DURING CRANKING IS DETENTES AND IS INPUT AS A CONTROL SIGNAL TO **TERMINAL STA** OF THE ENGINE CONTROL MODULE.

2. CONTROL SYSTEM

* SFI SYSTEM

THE SFI SYSTEM MONITORS THE ENGINE CONDITION THROUGH THE SIGNALS, WHICH ARE INPUT FROM EACH SENSOR (INPUT SIGNALS FROM (1) TO (11) ETC.). THE BEST FUEL INJECTION VOLUME IS DECIDED BASED ON THIS DATA AND THE PROGRAM MEMORIZED BY THE ENGINE CONTROL MODULE, AND THE CONTROL SIGNAL IS OUTPUT TO **TERMINALS #10, #20, #30, AND #40** OF THE ENGINE CONTROL MODULE TO OPERATE THE INJECTOR (INJECT THE FUEL). THE SFI SYSTEM PRODUCES CONTROL OF FUEL INJECTION OPERATION BY THE ENGINE CONTROL MODULE IN RESPONSE TO THE DRIVING CONDITIONS.

DURING ENGINE CRANKING (SIGNAL INPUT TO **TERMINAL STA**) OR FOR APPROX. **2** SECONDS AFTER NE SIGNAL INPUT, ENGINE CONTROL MODULE OPERATION ENERGIZED (POINT CLOSED) THE FUEL PUMP CIRCUIT INSIDE THE CIRCUIT OPENING RELAY, CAUSING THE FUEL PUMP TO OPERATE.

* ESA SYSTEM

THE ESA SYSTEM MONITORS THE ENGINE REVOLUTIONS USING THE SIGNALS (INPUT SIGNALS (1, 4, 5, 10, 11)) INPUT TO THE ENGINE CONTROL MODULE FROM EACH SENSOR. BASED ON THIS DATA AND THE PROGRAM MEMORIZED IN THE ENGINE CONTROL MODULE, THE MOST APPROPRIATE IGNITION TIMING IS DECIDED AND CURRENT IS OUTPUT TO **TERMINAL IGT1** AND **IGT2** OF THE ENGINE CONTROL MODULE. THIS OUTPUT CONTROLS THE IGNITER TO PRODUCE THE MOST APPROPRIATE IGNITION TIMING FOR THE DRIVING CONDITIONS.

* IDLE AIR CONTROL SYSTEM

THE IDLE AIR CONTROL SYSTEM INCREASES THE RPM AND PROVIDES IDLING STABILITY FOR FAST IDLE–UP WHEN THE ENGINE IS COLD AND WHEN THE IDLE SPEED HAS DROPPED DUE TO ELECTRICAL LOAD, ECT. THE ENGINE CONTROL MODULE EVALUATES THE SIGNALS FROM EACH SENSOR (INPUT SIGNALS (1, 4, 5, 6, 7, 8)), OUTPUTS CURRENT TO **TERMINAL RSC** AND **RSO**, AND CONTROLS THE IDLE AIR CONTROL VALVE.

* A/C CUT CONTROL SYSTEM

WHEN THE VEHICLE SUDDENLY ACCELERATES FROM LOW ENGINE SPEED, THIS SYSTEM CUTS OFF AIR CONDITIONING OPERATION FOR A FIXED PERIOD OF TIME IN RESPONSE TO THE VEHICLE SPEED, THROTTLE VALVE OPENING ANGLE AND INTAKE MANIFOLD PRESSURE IN ORDER TO MAINTAIN ACCELERATION PERFORMANCE. THE ENGINE CONTROL MODULE RECEIVES INPUT SIGNALS (4, 5, 6, 7, AND 10), AND OUTPUTS SIGNALS TO **TERMINAL ACT**.

3. DIAGNOSIS SYSTEM

WITH THE DIAGNOSIS SYSTEM, WHEN THERE IS A MALFUNCTIONING IN THE ENGINE CONTROL MODULE SIGNAL SYSTEM, THE MALFUNCTION SYSTEM IS RECORDED IN THE MEMORY THE MALFUNCTIONING SYSTEM CAN THEN BE FOUND BY READING THE DISPLAY (CODE) OF THE MALFUNCTION INDICATOR LAMP.

4. FAIL–SAFE SYSTEM

WHEN A MALFUNCTIONING OCCURS IN ANY SYSTEM, IF THERE IS A POSSIBILITY OF ENGINE TROUBLE BEING CAUSED BY CONTINUED CONTROL BASED ON THE SIGNALS FROM THAT SYSTEM. THE FAIL–SAFE SYSTEM EITHER CONTROLS THE SYSTEM BY USING DATA (STANDARD VALUED) RECORDED IN THE ENGINE CONTROL MODULE MEMORY OR ELSE STOPS THE ENGINE.

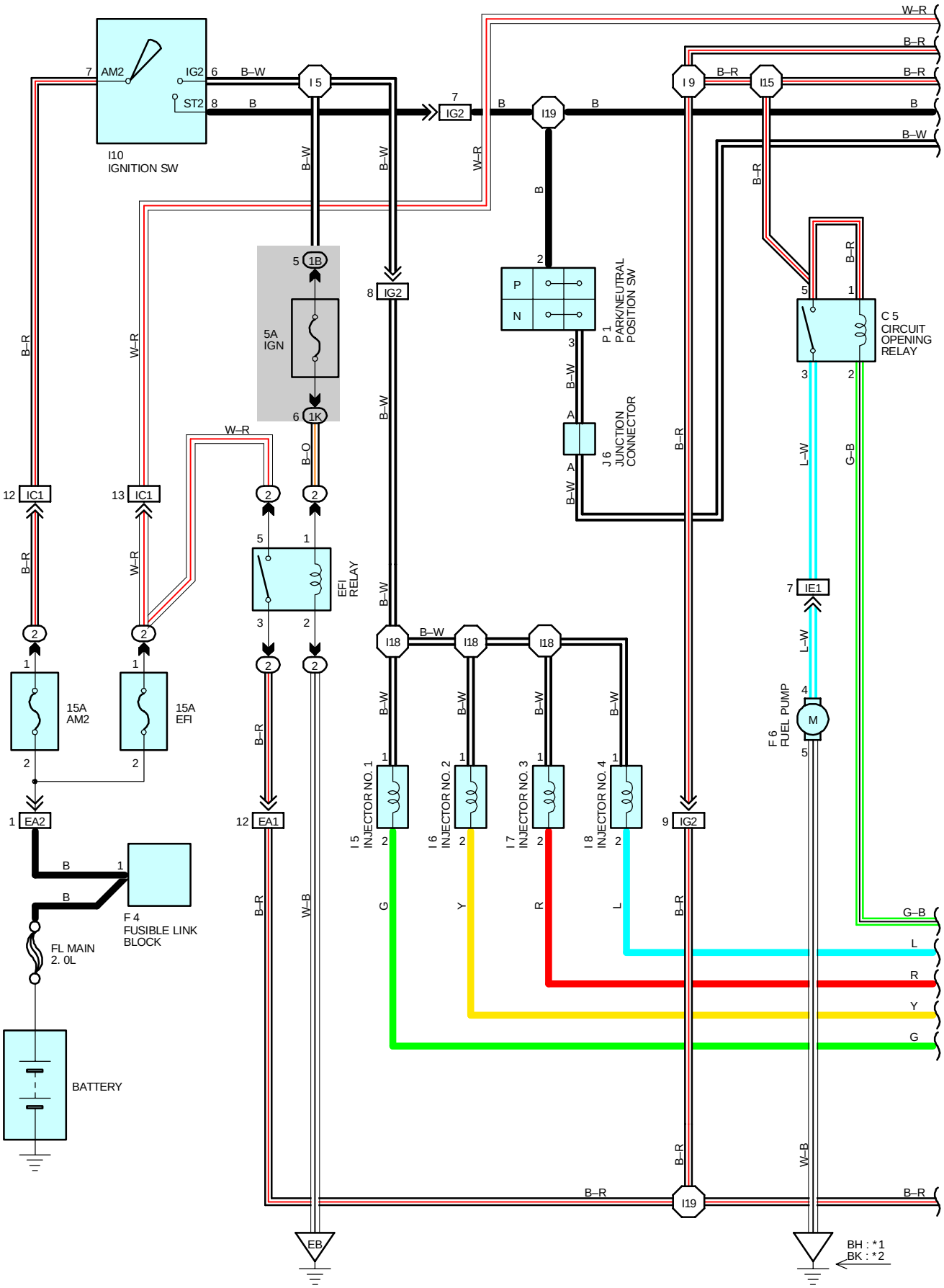
I10
IGNITION SW
AM2
IG2
ST2
I 5
I 9
I15
I19
IG2
5A
IGN
1B
1K
P 1
PARK/NEUTRAL
POSITION SW
J 6
JUNCTION
CONNECTOR
C 5
CIRCUIT
OPENING
RELAY
EFI
RELAY
IC1
15A
AM2
15A
EFI
EA2
EA1
F 4
FUSIBLE LINK
BLOCK
FL MAIN
2. 0L
BATTERY
I18
I 5
INJECTOR NO. 1
I 6
INJECTOR NO. 2
I 7
INJECTOR NO. 3
I 8
INJECTOR NO. 4
IE1
F 6
FUEL PUMP
M
EB
BH : *1
BK : *2
W–R
B–R
B–W
B–O
B
G–B
L–W
G
Y
R
L

*1 : C/P
*2 : CONVERTIBLE

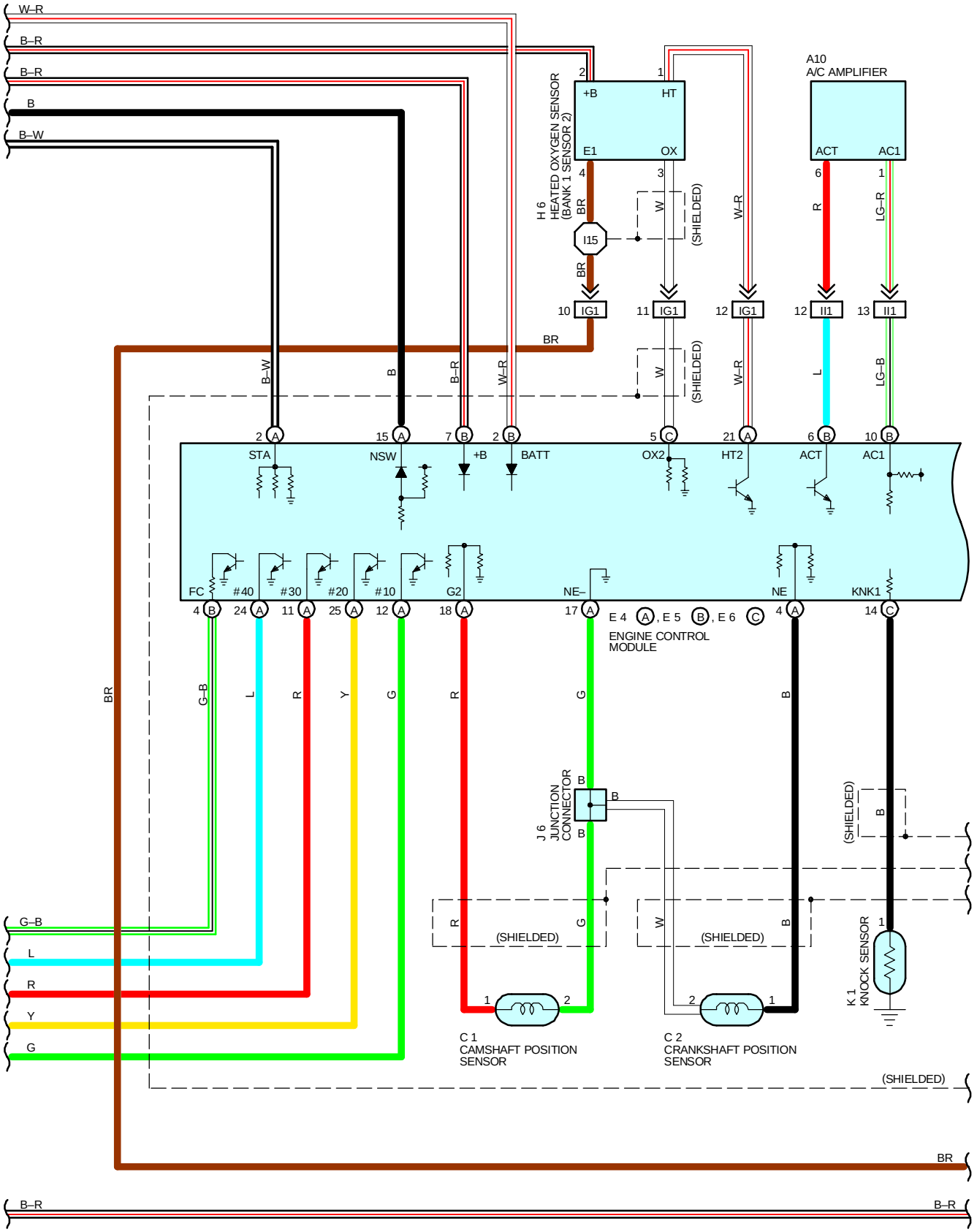

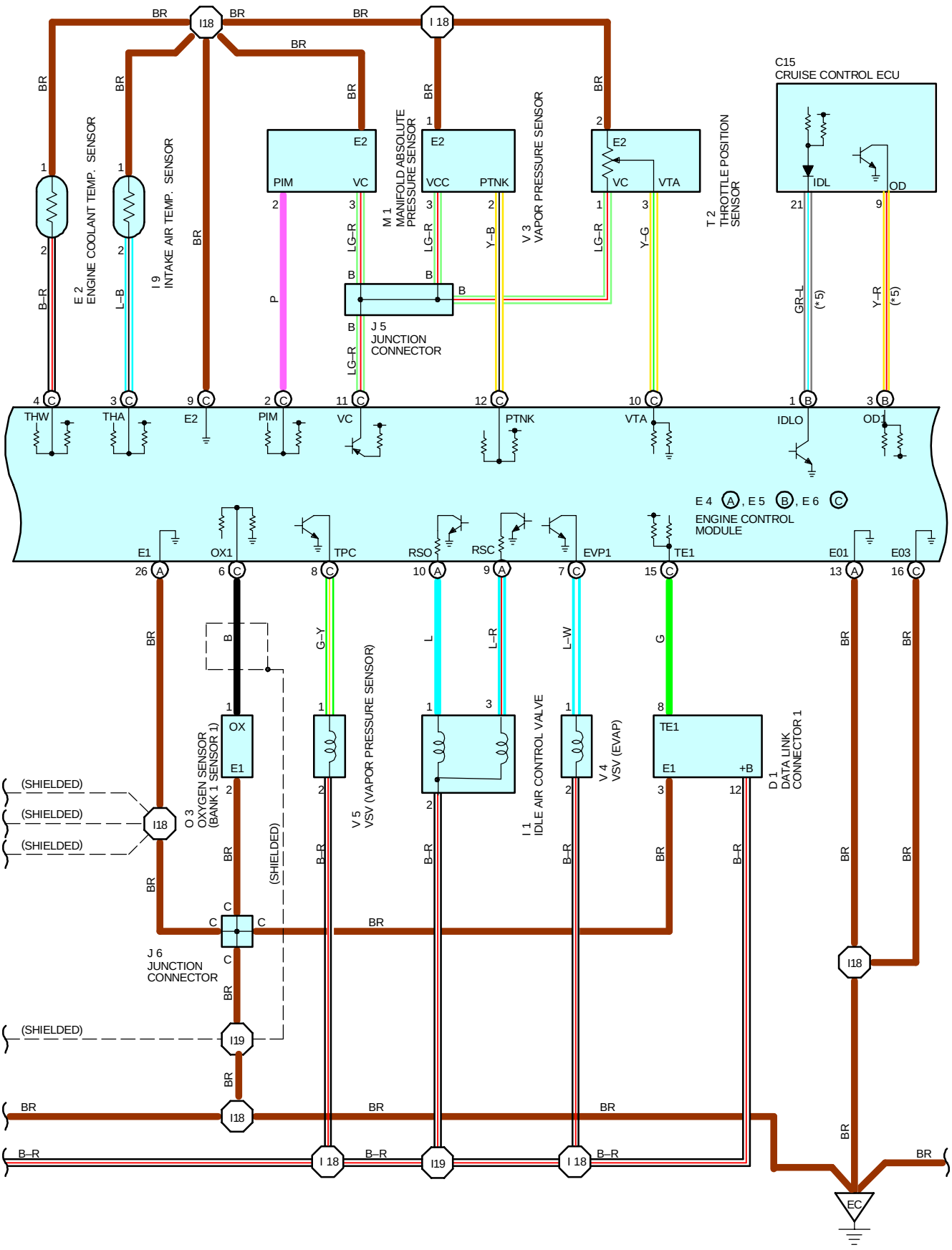
C15
CRUISE CONTROL ECU
IDL
OD
E 2
ENGINE COOLANT TEMP. SENSOR
I 9
INTAKE AIR TEMP. SENSOR
M 1
MANIFOLD ABSOLUTE PRESSURE SENSOR
V 3
VAPOR PRESSURE SENSOR
T 2
THROTTLE POSITION SENSOR
J 5
JUNCTION CONNECTOR
THW
THA
E2
PIM
VC
PTNK
VTA
IDLO
OD1
E4 A, E5 B, E6 C
ENGINE CONTROL MODULE
E1
OX1
TPC
RSO
RSC
EVP1
TE1
E01
E03
O 3
OXYGEN SENSOR (BANK 1 SENSOR 1)
V 5
VSV (VAPOR PRESSURE SENSOR)
I 1
IDLE AIR CONTROL VALVE
V 4
VSV (EVAP)
D 1
DATA LINK CONNECTOR 1
J 6
JUNCTION CONNECTOR
(SHIELDED)
EC

*3 : EXCEPT PUERTO RICO
*4 : PUETO RICO
*5 : W/CRUISE CONTROL

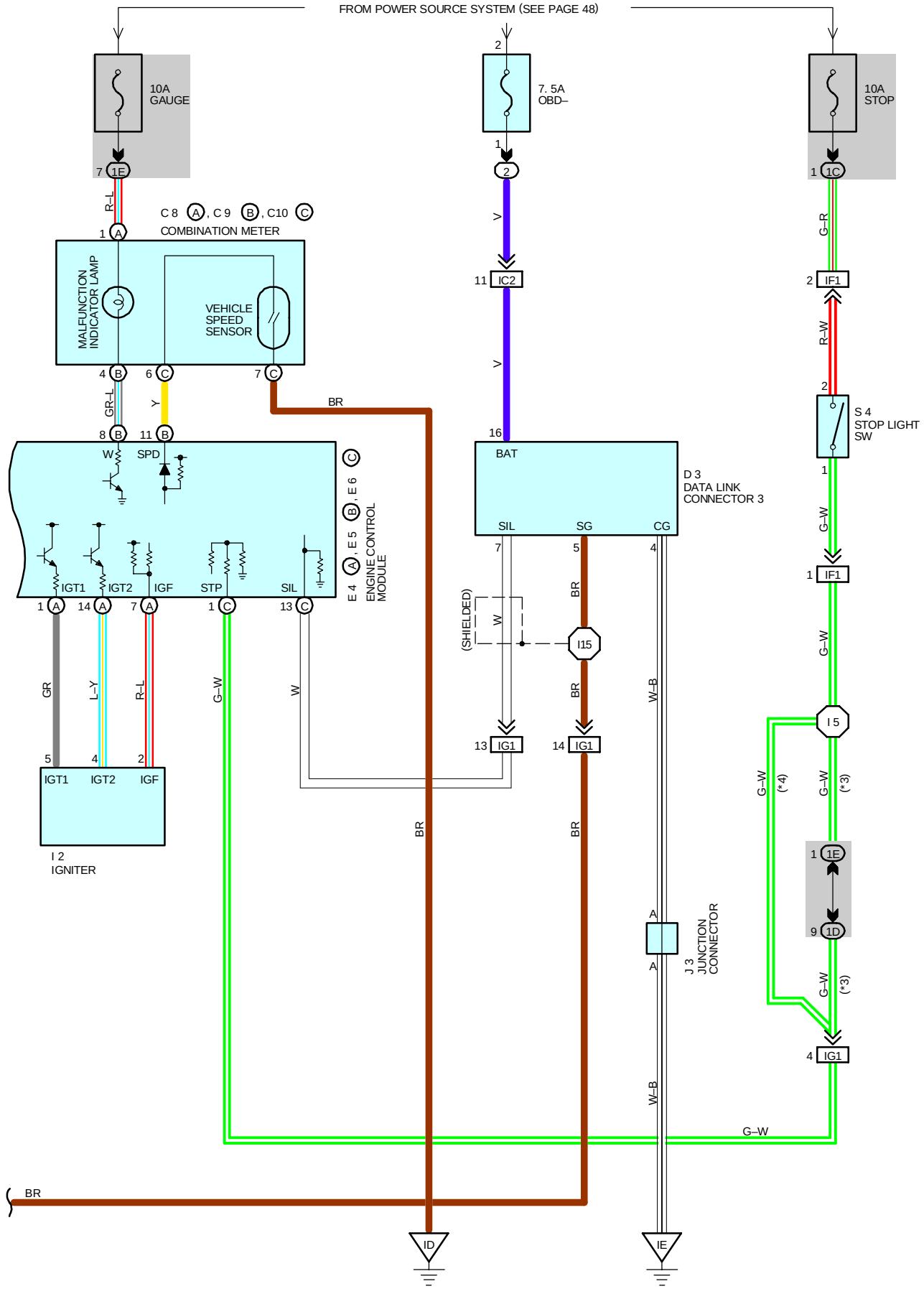

SERVICE HINTS

E4 (A), E5 (B), E6 (C) ENGINE CONTROL MODULE

VOLTAGE AT ENGINE CONTROL MODULE WIRING CONNECTORS

BATT–E1 : ALWAYS **9.0–14.0** VOLTS
PIM–E2 : **3.3–3.9** VOLTS (IGNITION SW AT **ON** POSITION)
VC–E2 : **4.5–5.5** VOLTS (IGNITION SW AT **ON** POSITION)
+B–E1 : **9.0–14.0** VOLTS (IGNITION SW AT **ON** POSITION)
VTA–E2 : **3.2–4.9** VOLTS (IGNITION SW AT **ON** POSITION AND THROTTLE VALVE FULLY OPEN)
THA–E2 : **0.5–3.4** VOLTS (IGNITION SW ON AND INTAKE AIR TEMP. **20**°C, **68**°F)
THW–E2 : **0.2–1.0** VOLTS (IGNITION SW ON AND COOLANT TEMP. **80**°C, **176**°F)
STA–E1 : **6.0–14.0** VOLTS (ENGINE CRANKING)
W–E1 : **9.0–14.0** VOLTS (NO TROUBLE AND ENGINE RUNNING)
TE1–E1 : **9.0–14.0** VOLTS (IGNITION SW ON AND DATA LINK CONNECTOR 1 **TE1–E1** CONNECTED)
0 VOLTS (IGNITION SW ON AND DATA LINK CONNECTOR 1 **TE1–E1** CONNECTED)
IGT1, IGT2 : PULSE GENERATION (ENGINE IDLING)
#10,#20,#30,#40–E01 : **9.0–14.0** VOLTS (IGNITION SW AT **ON** POSITION)

RESISTANCE AT ENGINE CONTROL MODULE WIRING CONNECTORS

VTA–E2 : **4.0–11.0**KΩ (THROTTLE VALVE OPEN)
0–6.0KΩ (THROTTLE VALVE FULLY CLOSED)
: **2.0–3.0**KΩ (INTAKE AIR TEMP. **20**°C, **68**°F)
NE–NE– : **0.14–0.18**KΩ

: PARTS LOCATION

CODE	SEE PAGE	CODE	SEE PAGE	CODE	SEE PAGE
A10	26	E6 C	26	J5	27
C1	24	F4	24	J6	27
C2	24	F6	28 (C/P), 29 (CONVERTIBLE)	K1	25
C5	26	H6	26	M1	25
C8 A	26	I1	25	O3	25
C9 B	26	I2	25	P1	25
C10 C	26	I5	25	S4	27
C15	26	I6	25	T2	25
D1	24	I7	25	V3	25
D3	26	I8	25	V4	25
E2	24	I9	25	V5	25
E4 A	26	I10	27		
E5 B	26	J3	27		

: RELAY BLOCKS

CODE	SEE PAGE	RELAY BLOCKS (RELAY BLOCK LOCATION)
2	22	ENGINE ROOM R/B (ENGINE COMPARTMENT LEFT)

: JUNCTION BLOCK AND WIRE HARNESS CONNECTOR

CODE	SEE PAGE	JUNCTION BLOCK AND WIRE HARNESS (CONNECTOR LOCATION)
1B	20	INSTRUMENT PANEL WIRE AND DRIVER SIDE J/B (LEFT KICK PANEL)
1C		
1D		
1E		
1K	20	ENGINE ROOM MAIN WIRE AND DRIVER SIDE J/B (LEFT KICK PANEL)

: CONNECTOR JOINING WIRE HARNESS AND WIRE HARNESS

CODE	SEE PAGE	JOINING WIRE HARNESS AND WIRE HARNESS (CONNECTOR LOCATION)
EA1	30	ENGINE WIRE AND ENGINE ROOM MAIN WIRE (INSIDE OF THE ENGINE ROOM R/B)
EA2		
IC1	32	INSTRUMENT PANEL WIRE AND ENGINE ROOM MAIN WIRE (LEFT LICK PANEL)
IC2		
IE1	32	INSTRUMENT PANEL WIRE AND FLOOR WIRE (LEFT KICK PANEL)
IF1	34	INSTRUMENT PANEL WIRE AND SWITCH WIRE (NEAR THE STEERING COLUMN)
IG1	34	ENGINE WIRE AND INSTRUMENT PANEL WIRE (NEAR THE BLOWER UNIT)
IG2		
II1	34	INSTRUMENT PANEL WIRE AND A/C SUB WIRE (NEAR THE BLOWER UNIT)

: GROUND POINTS

CODE	SEE PAGE	GROUND POINTS LOCATION
EB	30	FRONT SIDE OF THE LEFT FENDER
EC	30	RIGHT SIDE OF THE SURGE TANK
ID	32	LEFT KICK PANEL
IE	32	INSTRUMENT PANEL BRACE LH
BH	36 (C/P)	LEFT SIDE OF THE UPPER BACK PANEL
BK	37 (CONVERTIBLE)	UPPER THE REAR WHEEL HOUSE LH

: SPLICE POINTS

CODE	SEE PAGE	WIRE HARNESS WITH SPLICE POINTS	CODE	SEE PAGE	WIRE HARNESS WITH SPLICE POINTS
I5	34	INSTRUMENT PANEL WIRE	I18	34	ENGINE WIRE
I9			I19		
I15					







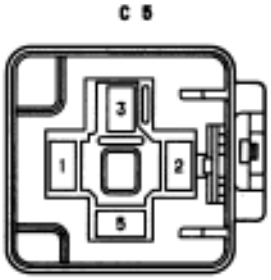

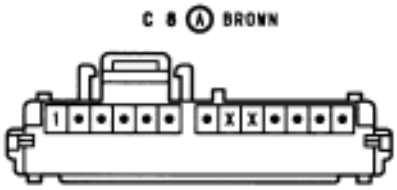

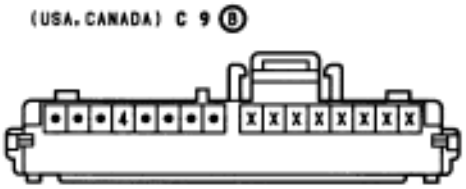

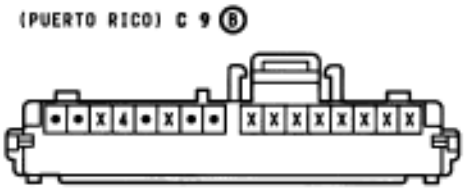

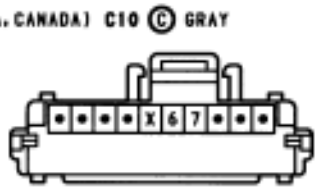

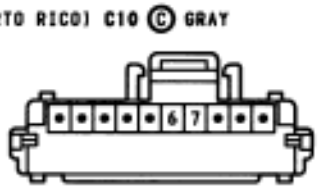

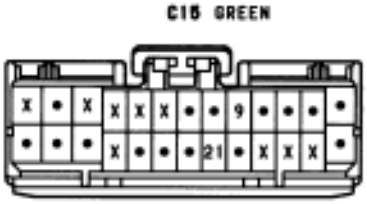

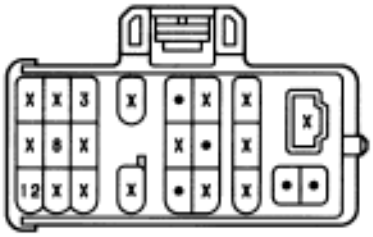

*1 : USA, CANADA
*2 : PUERTO RICO

D 3 BLACK

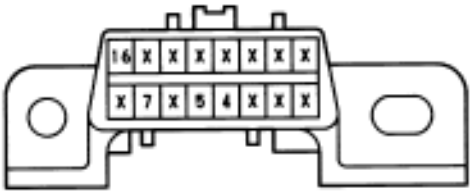

E 2 GREEN



E 4 (A)

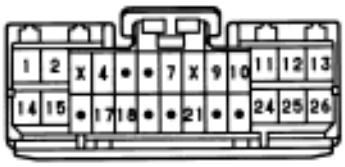

(*1) E 5 (B)



(*2) E 5 (B)



E 6 (C)



F 4

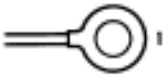

F 6 DARK



H 6 DARK GRAY



I 1 GRAY



I 2 BLACK

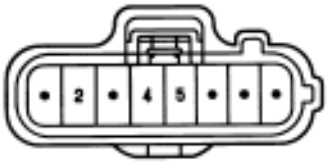

I 5, I 6, I 7, I 8 DARK GRAY



I 9 DARK GRAY



I10

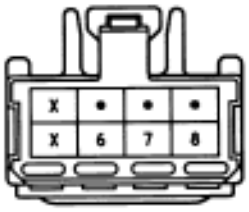

J 3 BLUE



(HINT:SEE PAGE 7)

J 5 GRAY



(HINT:SEE PAGE 7)

J 6 GRAY



(HINT:SEE PAGE 7)

K 1 DARK GRAY



M 1 BLACK



O 3 DARK GRAY



P 1 GRAY



(W/ CRUISE S 4 CONTROL)

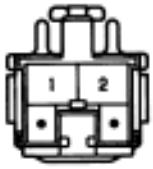

(W/O CRUISE S 4 CONTROL)



T 2 BLACK



V 3 BLACK



V 4 BLUE



V 5 BROWN



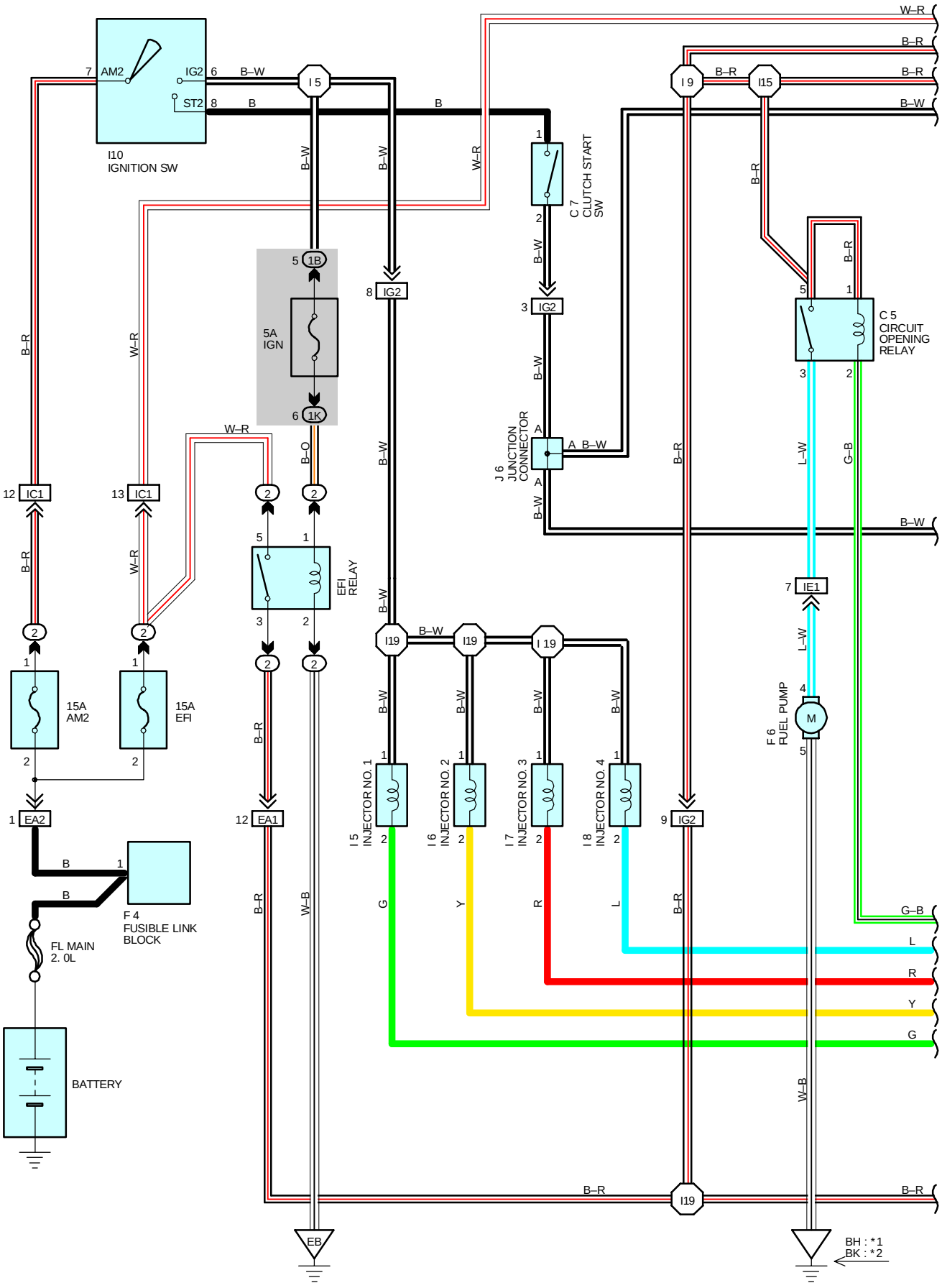
I10
IGNITION SW
AM2
IG2
ST2
I 5
B–W
B
W–R
B–R
I 9
I15
C 7
CLUTCH START
SW
C 5
CIRCUIT
OPENING
RELAY
J 6
JUNCTION
CONNECTOR
5A
IGN
1B
1K
IG2
B–O
L–W
G–B
IC1
EFI
RELAY
15A
AM2
15A
EFI
EA2
EA1
IE1
F 6
FUEL PUMP
M
I19
I 19
I 5
INJECTOR NO. 1
I 6
INJECTOR NO. 2
I 7
INJECTOR NO. 3
I 8
INJECTOR NO. 4
G
Y
R
L
F 4
FUSIBLE LINK
BLOCK
FL MAIN
2. 0L
BATTERY
EB
BH : *1
BK : *2

*1 : C/P
*2 : CONVERTIBLE

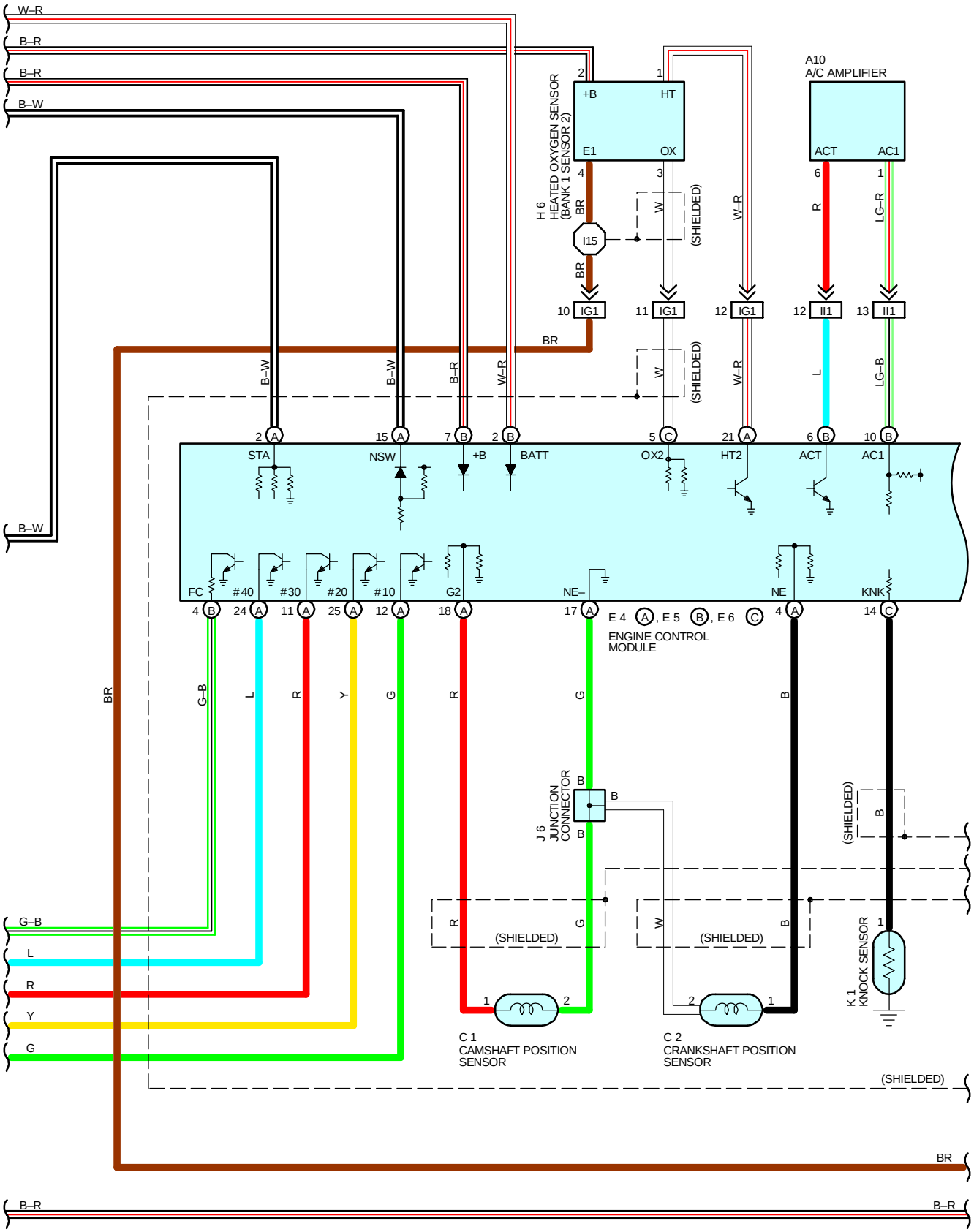

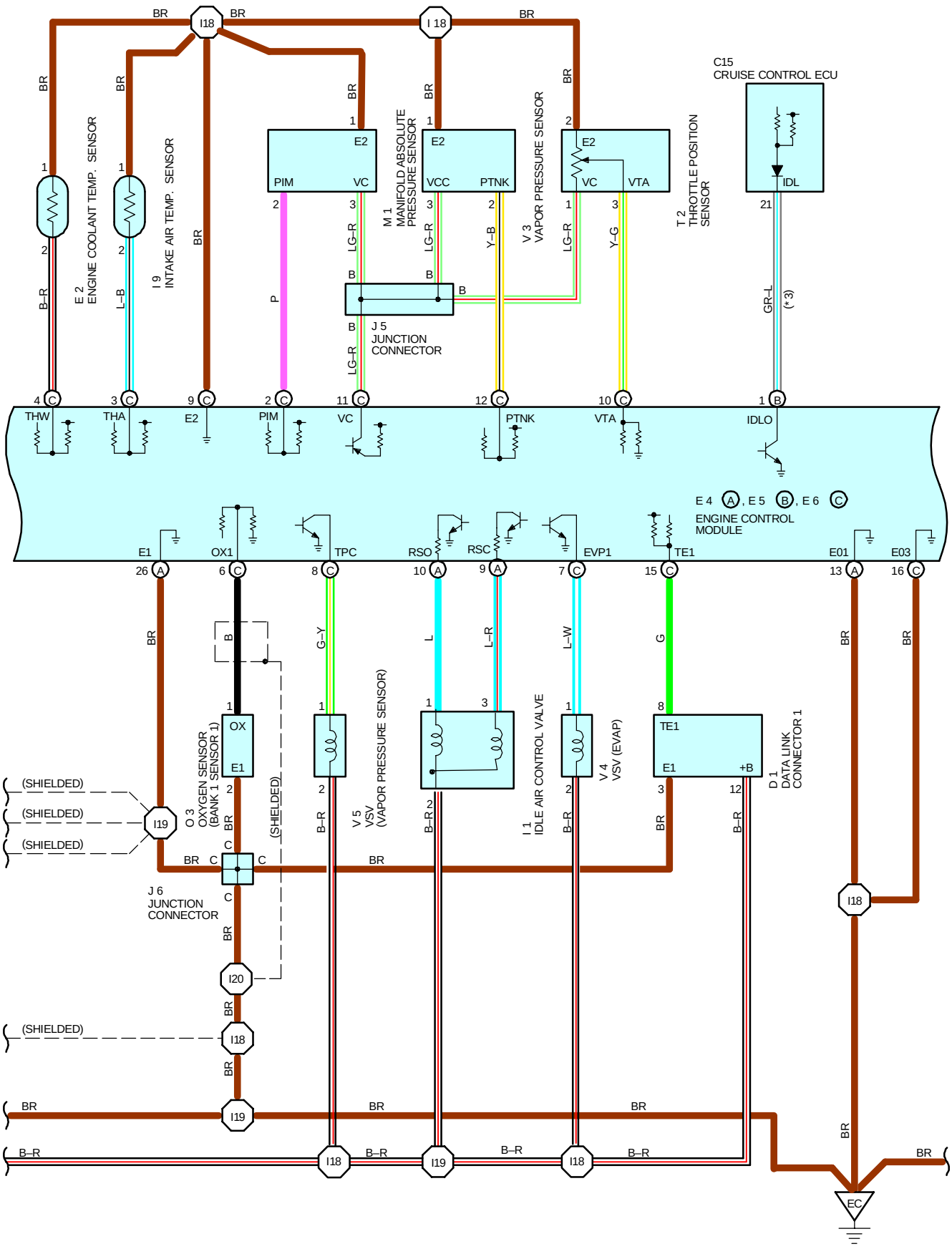
I18
I 18
C15
CRUISE CONTROL ECU
E 2
ENGINE COOLANT TEMP. SENSOR
I 9
INTAKE AIR TEMP. SENSOR
M 1
MANIFOLD ABSOLUTE PRESSURE SENSOR
V 3
VAPOR PRESSURE SENSOR
T 2
THROTTLE POSITION SENSOR
J 5
JUNCTION CONNECTOR
THW
THA
E2
PIM
VC
PTNK
VTA
IDLO
IDL
E 4 A, E 5 B, E 6 C
ENGINE CONTROL MODULE
E1
OX1
TPC
RSO
RSC
EVP1
TE1
E01
E03
O 3
OXYGEN SENSOR (BANK 1 SENSOR 1)
V 5
VSV (VAPOR PRESSURE SENSOR)
I 1
IDLE AIR CONTROL VALVE
V 4
VSV (EVAP)
D 1
DATA LINK CONNECTOR 1
J 6
JUNCTION CONNECTOR
I19
I20
(SHIELDED)
EC

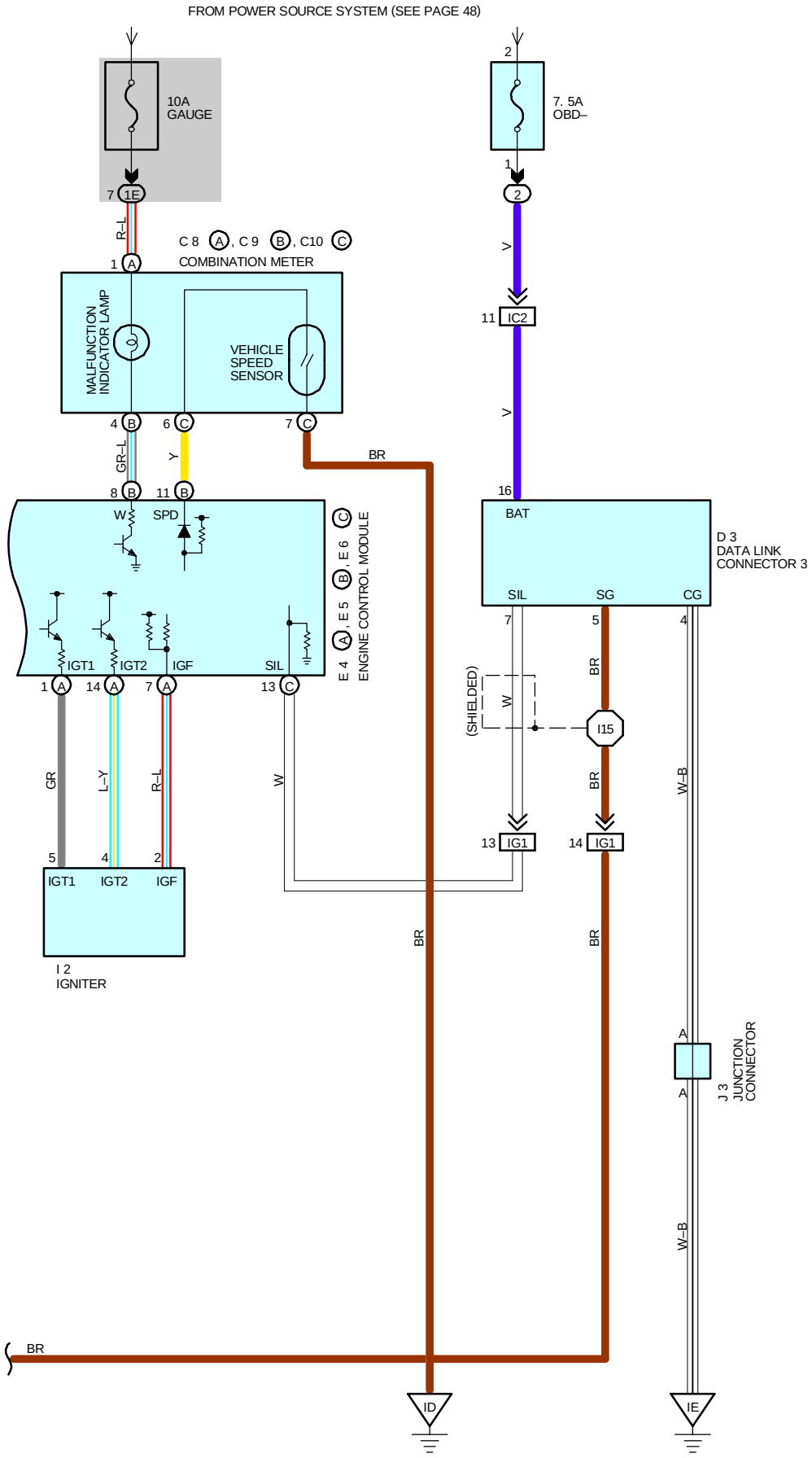
FROM POWER SOURCE SYSTEM (SEE PAGE 48)
10A
GAUGE
7. 5A
OBD–
C 8 A , C 9 B , C10 C
COMBINATION METER
MALFUNCTION
INDICATOR LAMP
VEHICLE
SPEED
SENSOR
R–L
V
GR–L
Y
BR
W
SPD
IGT1
IGT2
IGF
SIL
E 4 A , E 5 B , E 6 C
ENGINE CONTROL MODULE
BAT
D 3
DATA LINK
CONNECTOR 3
SIL
SG
CG
(SHIELDED)
I15
IC2
IG1
GR
L–Y
W–B
I 2
IGNITER
J 3
JUNCTION
CONNECTOR
ID
IE

SERVICE HINTS

E4 (A), E5 (B), E6 (C) ENGINE CONTROL MODULE

VOLTAGE AT ENGINE CONTROL MODULE WIRING CONNECTORS

BATT–E1 : ALWAYS **9.0–14.0** VOLTS
PIM–E2 : **3.3–3.9** VOLTS (IGNITION SW AT **ON** POSITION)
VC–E2 : **4.5–5.5** VOLTS (IGNITION SW AT **ON** POSITION)
+B–E1 : **9.0–14.0** VOLTS (IGNITION SW AT **ON** POSITION)
VTA–E2 : **3.2–4.9** VOLTS (IGNITION SW AT **ON** POSITION AND THROTTLE VALVE FULLY OPEN)
THA–E2 : **0.5–3.4** VOLTS (IGNITION SW ON AND INTAKE AIR TEMP. **20**°C, **68**°F)
THW–E2 : **0.2–1.0** VOLTS (IGNITION SW ON AND COOLANT TEMP. **80**°C, **176**°F)
STA–E1 : **6.0–14.0** VOLTS (ENGINE CRANKING)
W–E1 : **9.0–14.0** VOLTS (NO TROUBLE AND ENGINE RUNNING)
TE1–E1 : **9.0–14.0** VOLTS (IGNITION SW ON AND DATA LINK CONNECTOR 1 **TE1–E1** CONNECTED)
0 VOLTS (IGNITION SW ON AND DATA LINK CONNECTOR 1 **TE1–E1** CONNECTED)
IGT1, IGT2 : PULSE GENERATION (ENGINE IDLING)
#10,#20,#30,#40–E01 : **9.0–14.0** VOLTS (IGNITION SW AT **ON** POSITION)

RESISTANCE AT ENGINE CONTROL MODULE WIRING CONNECTORS

VTA–E2 : **4.0–11.0**KΩ (THROTTLE VALVE OPEN)
0–6.0KΩ (THROTTLE VALVE FULLY CLOSED)
: **2.0–3.0**KΩ (INTAKE AIR TEMP. **20**°C, **68**°F)
NE–NE– : **0.14–0.18**KΩ

: PARTS LOCATION

CODE	SEE PAGE	CODE	SEE PAGE	CODE	SEE PAGE
A10	26	E4 A	26	I9	25
C1	24	E5 B	26	I10	27
C2	24	E6 C	26	J3	27
C5	26	F4	24	J5	27
C7	26	F6	28 (C/P), 29 (CONVERTIBLE)	J6	27
C8 A	26	H6	26	K1	25
C9 B	26	I1	25	M1	25
C10 C	26	I2	25	O3	25
C15	26	I5	25	T2	25
D1	24	I6	25	V3	25
D3	26	I7	25	V4	25
E2	24	I8	25	V5	25

: RELAY BLOCKS

CODE	SEE PAGE	RELAY BLOCKS (RELAY BLOCK LOCATION)
2	22	ENGINE ROOM R/B (ENGINE COMPARTMENT LEFT)

: JUNCTION BLOCK AND WIRE HARNESS CONNECTOR

CODE	SEE PAGE	JUNCTION BLOCK AND WIRE HARNESS (CONNECTOR LOCATION)
1B	20	INSTRUMENT PANEL WIRE AND DRIVER SIDE J/B (LEFT KICK PANEL)
1E		
1K	20	ENGINE ROOM MAIN WIRE AND DRIVER SIDE J/B (LEFT KICK PANEL)

: CONNECTOR JOINING WIRE HARNESS AND WIRE HARNESS

CODE	SEE PAGE	JOINING WIRE HARNESS AND WIRE HARNESS (CONNECTOR LOCATION)
EA1	30	ENGINE WIRE AND ENGINE ROOM MAIN WIRE (INSIDE OF THE ENGINE ROOM R/B)
EA2		
IC1	32	INSTRUMENT PANEL WIRE AND ENGINE ROOM MAIN WIRE (LEFT LICK PANEL)
IC2		
IE1	32	INSTRUMENT PANEL WIRE AND FLOOR WIRE (LEFT KICK PANEL)
IG1	34	ENGINE WIRE AND INSTRUMENT PANEL WIRE (NEAR THE BLOWER UNIT)
IG2		
II1	34	INSTRUMENT PANEL WIRE AND A/C SUB WIRE (NEAR THE BLOWER UNIT)

: GROUND POINTS

CODE	SEE PAGE	GROUND POINTS LOCATION
EB	30	FRONT SIDE OF THE LEFT FENDER
EC	30	RIGHT SIDE OF THE SURGE TANK
ID	32	LEFT KICK PANEL
IE	32	INSTRUMENT PANEL BRACE LH
BH	36 (C/P)	LEFT SIDE OF THE UPPER BACK PANEL
BK	37 (CONVERTIBLE)	UPPER THE REAR WHEEL HOUSE LH

: SPLICE POINTS

CODE	SEE PAGE	WIRE HARNESS WITH SPLICE POINTS	CODE	SEE PAGE	WIRE HARNESS WITH SPLICE POINTS
I5	34	INSTRUMENT PANEL WIRE	I18	34	ENGINE WIRE
I9			I19		
I15			I20		

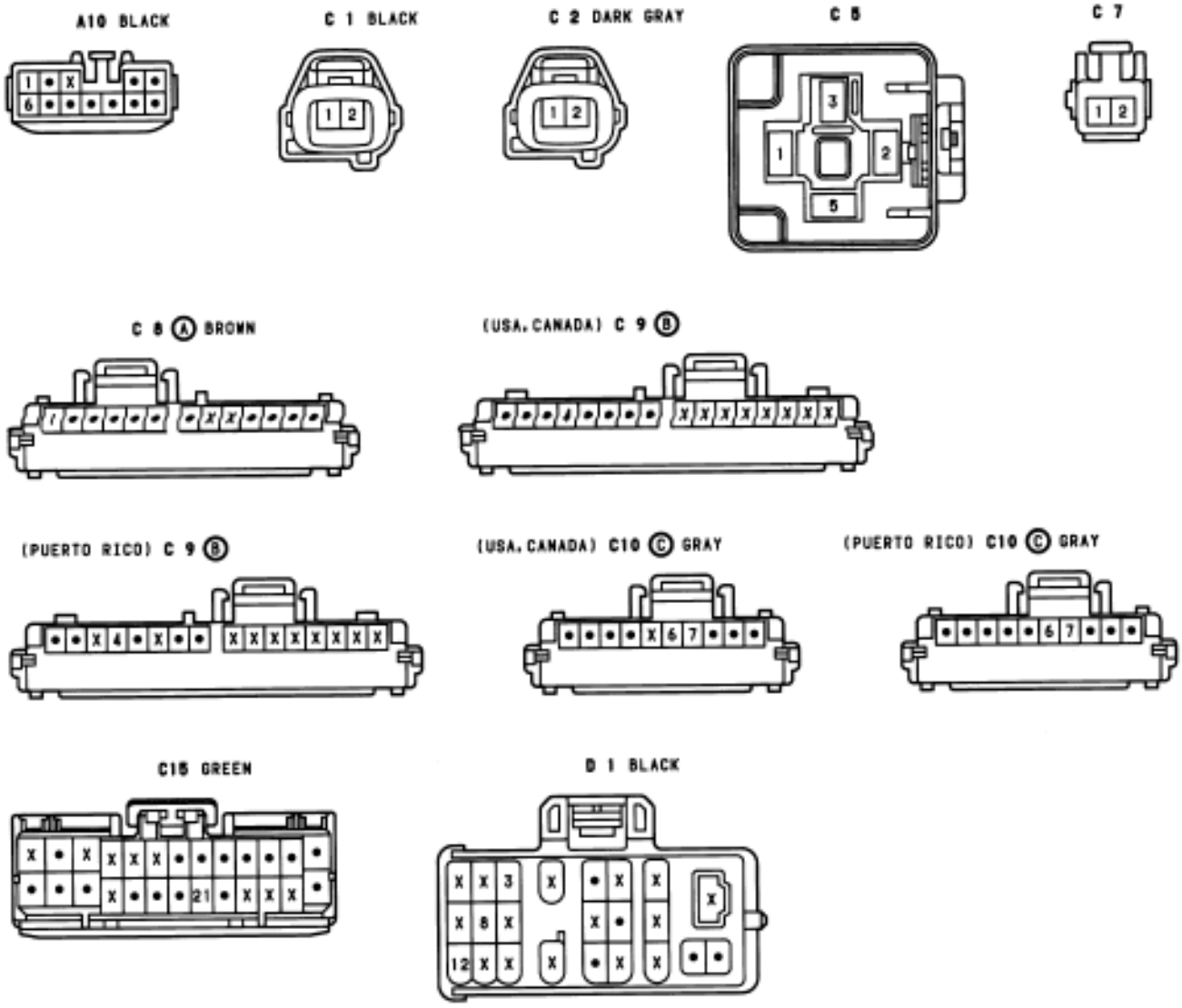

D 3 BLACK

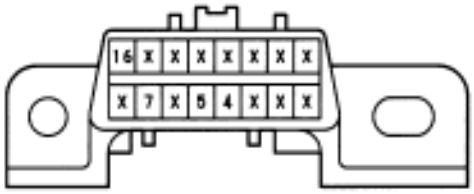

E 2 GREEN



E 4 Ⓐ



(*1) E 5 Ⓑ



(*2) E 5 Ⓑ



E 6 Ⓒ



F 4

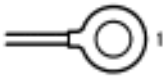

F 6 DARK



H 6 DARK GRAY



I 1 GRAY



I 2 BLACK

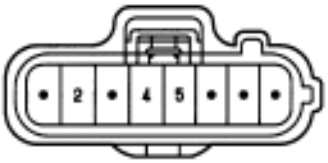

I 5, I 6 DARK GRAY



I 9 DARK GRAY



I10

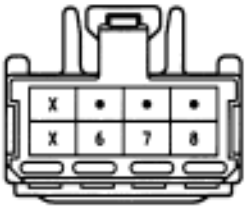

J 3 BLUE



(HINT:SEE PAGE 7)

J 5 GRAY

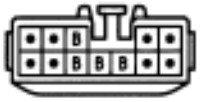

(HINT:SEE PAGE 7)

J 6 GRAY



(HINT:SEE PAGE 7)

K 1 DARK GRAY



O 3 DARK GRAY



M 1 BLACK



T 2 BLACK



V 3 BLACK



V 4 BLUE



V 5 BROWN



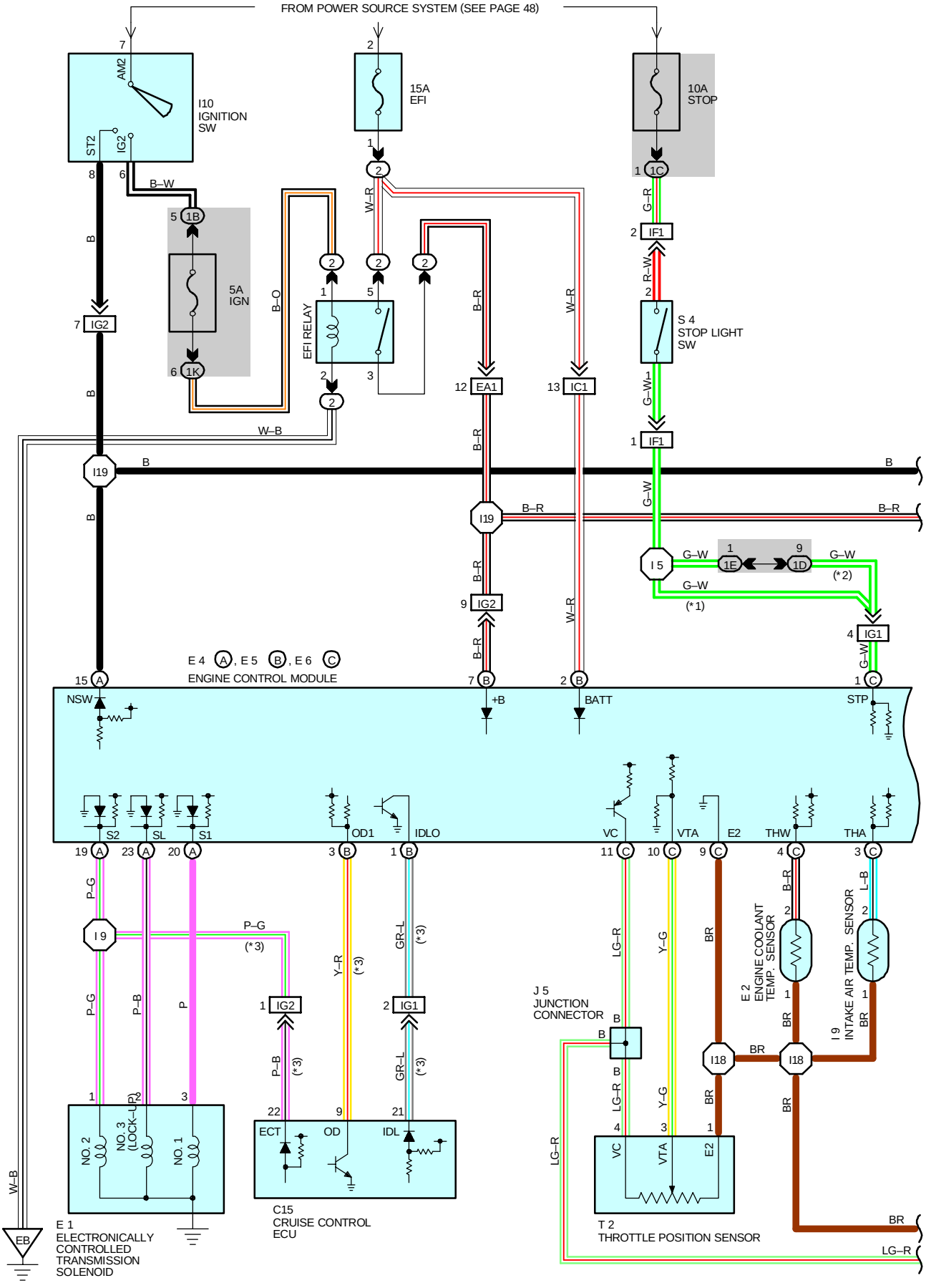
FROM POWER SOURCE SYSTEM (SEE PAGE 48)
I10 IGNITION SW
AM2
ST2
IG2
15A EFI
10A STOP
5A IGN
EFI RELAY
S 4 STOP LIGHT SW
IF1
IG2
EA1
IC1
I19
I 5
IG1
E 4 A, E 5 B, E 6 C
ENGINE CONTROL MODULE
NSW
+B
BATT
STP
S2
SL
S1
OD1
IDLO
VC
VTA
E2
THW
THA
I 9
J 5 JUNCTION CONNECTOR
E 2 ENGINE COOLANT TEMP. SENSOR
I 9 INTAKE AIR TEMP. SENSOR
I18
NO. 2
NO. 3 (LOCK-UP)
NO. 1
ECT
OD
IDL
C15 CRUISE CONTROL ECU
T 2 THROTTLE POSITION SENSOR
E 1 ELECTRONICALLY CONTROLLED TRANSMISSION SOLENOID
EB
B–W
B
W–B
B–O
W–R
B–R
G–R
R–W
G–W
P–G
P–B
P
Y–R
GR–L
LG–R
Y–G
BR
L–B
(*1)
(*2)
(*3)

*1 : PUERTO RICO
*2 : USA, CANADA
*3 : W/ CRUISE CONTROL

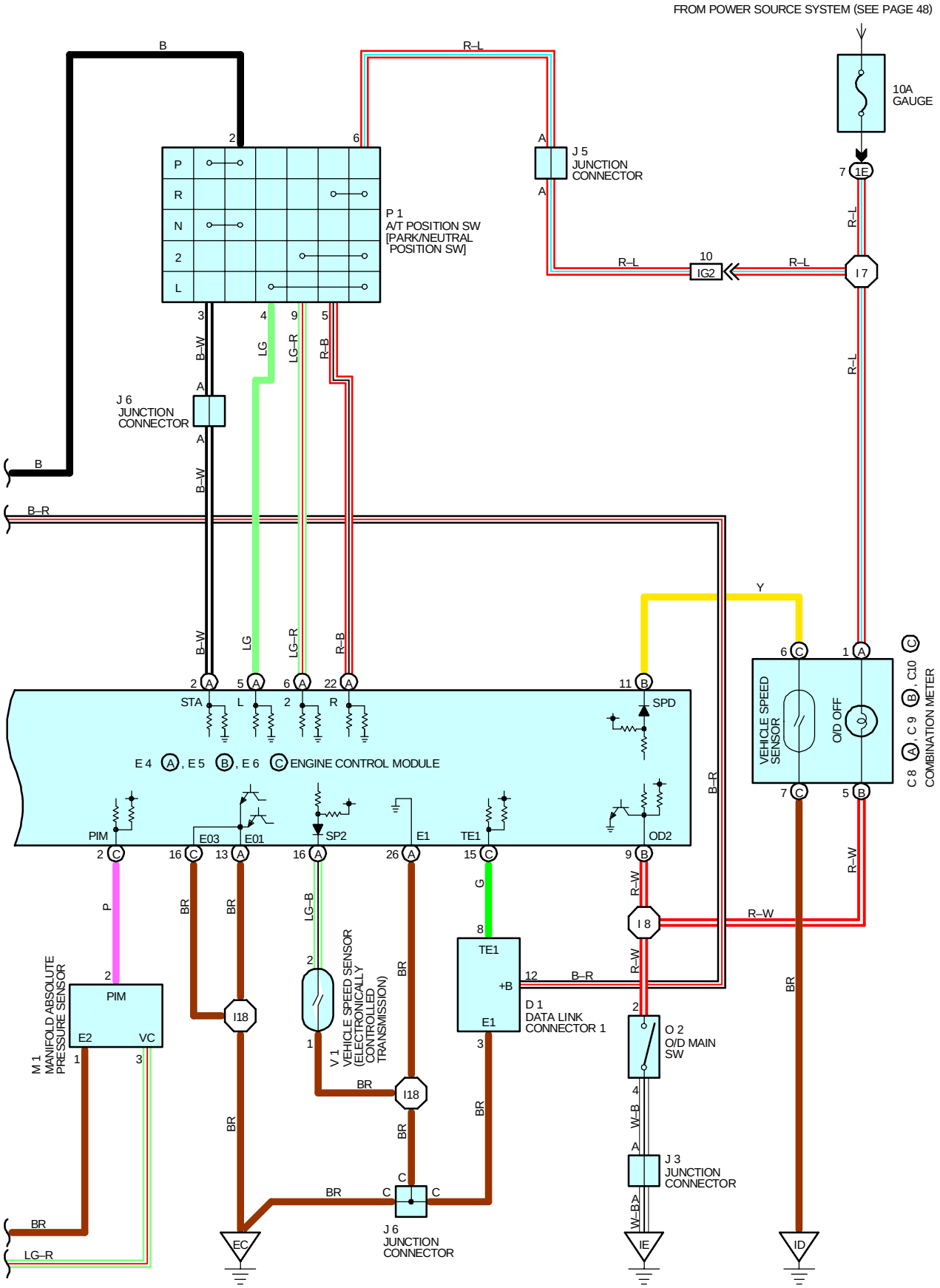

ELECTRONICALLY CONTROLLED TRANSMISSION

SYSTEM OUTLINE

PREVIOUS AUTOMATIC TRANSAXLE HAVE SELECTED EACH GEAR SHIFT USING MECHANICALLY CONTROLLED THROTTLE HYDRAULIC PRESSURE, GOVERNOR HYDRAULIC PRESSURE AND LOCK–UP HYDRAULIC PRESSURE. THE ELECTRONICALLY CONTROLLED TRANSMISSION, HOWEVER, ELECTRICALLY CONTROLS THE LINE PRESSURE AND LOCK–UP PRESSURE ETC., THROUGH THE SOLENIOD VALVE. THE ENGINE CONTROL MODULE CONTROLS THE SOLENOID VALVE BASED ON THE INPUT SIGNALS FROM EACH SENSOR MAKES SMOOTH DRIVING POSSIBLE BY SHIFT SELECTION FOR EACH GEAR WHICH IS MOST APPROPRIATE TO THE DRIVING CONDITIONS AT THAT TIME.

1. GEAR SHIFT OPERATION

DURING DRIVING, THE ENGINE CONTROL MODULE SELECTS THE SHIFT FOR EACH GEAR WHICH IS MOST APPROPRIATE TO THE DRIVING CONDITIONS, BASED ON INPUT SIGNALS FROM THE ENGINE COOLANT TEMP. SENSOR TO **TERMINAL THW** OF THE ENGINE CONTROL MODULE, AND ALSO THE INPUT SIGNALS TO **TERMINAL SP2** OF THE ENGINE CONTROL MODULE FROM THE VEHICLE SPEED SENSOR DEVOTED TO THE ENGINE CONTROL MODULE. CURRENT IS THEN OUTPUT TO THE ELECTRONICALLY CONTROLLED TRANSMISSION SOLENIOD. WHEN SHIFTING TO 1ST SPEED, THE CURRENT FLOWS FROM **TERMINAL S1** OF THE ENGINE CONTROL MODULE TO **TERMINAL 3** OF THE ELECTRONICALLY CONTROLLED TRANSMISSION SOLENIOD → **GROUND**, AND CONTINUITY TO THE NO. 1 SOLENIOD CAUSES THE SHIFT. FOR 2ND SPEED, THE CURRENT FLOWS FROM **TERMINAL S1** OF THE ENGINE CONTROL MODULE TO **TERMINAL 3** OF THE ELECTRONICALLY CONTROLLED TRANSMISSION SOLENOID → **GROUND**, AND FROM **TERMINAL S2** OF THE ENGINE CONTROL MODULE TO **TERMINAL 1** OF THE ELECTRONICALLY CONTROLLED TRANSMISSION SOLENOID → **GROUND**, AND CONTINUITY TO SOLENOID NO.1 AND NO.2 CAUSES THE SHIFT. FOR 3RD SPPED, THERE IS NOT CONTINUITY TO NO.1 SOLENOID, ONLY TO NO.2, CAUSING THE SHIFT. SHIFTING INTO 4TH SPEED (OVERDRIVE) TAKES PLACE WHEN THERE IS NO CONTINUITY TO EITHER NO. 1 OR NO. 2 SOLENOID.

2. LOCK–UP OPERATION

WHEN THE ENGINE CONTROL MODULE JUDGES FROM EACH SIGNAL THAT LOCK–UP OPERATION CONDITIONS HAVE BEEN MET, THE CURRENT FLOWS FROM **TERMINAL SL** OF THE ENGINE CONTROL MODULE TO **TERMINAL 2** OF THE ELECTRONICALLY CONTROLLED TRANSMISSION SOLENIOD → **GROUND**, CAUSING CONTINUITY TO THE LOCK–UP SOLENIOD AND CAUSING LOCK–UP OPERATION.

3. STOP LIGHT SW CIRCUIT

IF THE BRAKE PEDAL IS DEPRESSED (STOP LIGHT SW ON) WHEN DRIVING IN LOCK–UP CONDITION, A SIGNAL IS INPUT TO **TERMINAL STP** OF THE ENGINE CONTROL MODULE, THE ENGINE CONTROL MODULE OPERATES AND CONTINUITY TO THE LOCK–UP SOLENIOD IS CUT.

4. OVERDRIVE CIRCUIT

* O/D MAIN SW ON
  WHEN THE O/D MAIN SW IS TURNED ON (SW POINT IS OPEN), A SIGNAL IS INPUT TO TO **TERMINAL OD2** OF THE ENGINE CONTROL MODULE AND ENGINE CONTROL MODULE OPERATION CAUSES GEAR SHIFT WHEN THE CONDITIONS FOR OVERDRIVE ARE MET.
* O/D OFF SW OFF
  WHEN THE O/D MAIN SW IS TURNED OFF (SW POINT IS CLOSED), THE CURRENT FLOWING THROUGH THE O/D OFF INDICATOR LIGHT FLOWS THROUGH THE O/D MAIN SW TO **GROUND**, CAUSING THE INDICATOR LIGHT TO LIGHT UP. AT THE SAME TIME, A SIGNAL IS INPUT TO **TERMINAL OD2** OF THE ENGINE CONTROL MODULE AND ENGINE CONTROL MODULE OPERATION PREVENTS SHIFT INTO OVERDRIVE.

SERVICE HINTS

E 4(A), E 5(C), E 6(B) ENGINE CONTROL MODULE

S1,S2–E1 : UNDER **1.0** VOLTS (IGNITION SW ON)
STP–E1 : **9.0–14.0** VOLTS (BRKAEPEDAL IS DEPRESSED)
UNDER 1.0 VOLTS (BRAKE PEDAL IS NOT DEPRESSED)
THW–E2 : **0.2–1.0** VOLTS (IGNITION SW ON AND COOLANT TEMP. **80**°C (**176**°F)
VTA–E2 : UNDER **1.0** VOLTS (IGNITION SW ON AND THROTTLE VALVE FULLY CLOSED)
3.2–4.9 VOLTS (IGNITION SW ON AND THROTTLE VALVE FULLY OPEN)
VC–E2 : **4.5–5.5** VOLTS (IGNITION SW ON)
OD2–E1 : **9.0–14.0** VOLTS (IGNITION SW AND O/D MAIN SW TURNED ON)
UNDER **1.0** VOLTS (IGNITION SW ON AND O/D MAIN SW TURNED OFF)
SPD–E1 : **0**↔**4.5–5.5** VOLTS REPEAT (IGNITION SW ON AND VEHICLE MOVING)
SP2–E1 : **0**↔**9.0–14.0** VOLTS REPEAT (IGNITION SW ON AND VEHICLE MOVING)
NSW–E1 : UNDER **1.0** VOLTS (IGNITION SW ON AND **P** OR **N** POSITION)
9.0–14.0 VOLTS (IGNITION SW ON AND **R, D, 2, L** POSITION)
2–E1 : **9.0–14.0** VOLTS (IGNITION SW ON AND PARK/NEUTRAL POSITION SW 2 POSITION)
UNDER **1.0** VOLTS (IGNITION SW ON AND EXCEPT PARK/NEUTRAL POSITION SW 2 POSITION)
LE1 : **9.0–14.0** VOLTS (IGNITION SW ON AND PARK/NEUTRALPOSITION SW L POSITION)
UNDER **1.0** VOLTS (IGNITION SW ON AND EXCEPT PARK/NEUTRAL POSITION SW **L** POSITION)
+B–E1 : **9.0–14.0** VOLTS (IGNITION SW ON)
BATT–E1 : **9.0–14.0** VOLTS (ALL CONDITIONS)

RESISTANCE AT ENGINE CONTROL MODULE WIRING CONNECTORS

(DISCONNECT WIRING CONNECTOR)
VTA–E2 : **2.0–10.2** KΩ (THROTTLE VALVE FULLY OPEN)
0.2–5.7 KΩ (THROTTLE VALVE FULLY CLOSED)
VC–E2 : **3.0–7.0** KΩ
THW–E2 : **0.2–0.4** KΩ (COOLANT TEMP. **80**°C, **176**°F)
S1,S2,SL–GROUND : **11.0–15.0** Ω (ALWAYS CONTINUITY)

0 2 O/D MAIN SW

2–4 : CLOSED WITH THE O/D MAIN SW OFF, OPEN WITH O/D MAIN SW ON

: PARTS LOCATION

CODE		SEE PAGE	CODE		SEE PAGE	CODE	SEE PAGE
C 8	A	26	E 4	A	26	J 6	27
C 9	B	26	E 5	B	26	M 1	25
C10	C	26	E 6	C	26	O 2	27
C15		26	I 9		25	P 1	25
D 1		24	I10		27	S 4	27
E 1		24	J 3		27	T 2	25
E 2		24	J 5		27	V 1	25

: RELAY BLOCKS

CODE	SEE PAGE	RELAY BLOCKS (RELAY BLOCK LOCATION)
2	22	ENGINE ROOM R/B (ENGINE COMPARTMENT LEFT)

: JUNCTION BLOCK AND WIRE HARNESS CONNECTOR

CODE	SEE PAGE	JUNCTION BLOCK AND WIRE HARNESS (CONNECTOR LOCATION)
1B	20	INSTRUMENT PANEL WIRE AND DRIVER SIDE J/B (LEFT KICK PANEL)
1C		
1D		
1E		
1K	20	ENGINE ROOM MAIN WIRE AND DRIVER SIDE J/B (LEFT KICK PANEL)

: CONNECTOR JOINING WIRE HARNESS AND WIRE HARNESS

CODE	SEE PAGE	JOINING WIRE HARNESS AND WIRE HARNESS (CONNECTOR LOCATION)
EA1	30	ENGINE WIRE AND ENGINE ROOM MAIN WIRE (INSIDE OF THE ENGINE ROOM R/B)
IC1	32	INSTRUMENT PANEL WIRE AND ENGINE ROOM MAIN WIRE (LEFT KICK PANEL)
IF1	34	INSTRUMENT PANEL WIRE AND SWITCH WIRE (NEAR THE STEERING COLUMN)
IG1	34	ENGINE WIRE AND INSTRUMENT PANEL WIRE (NEAR THE BLOWER UNIT)
IG2		

: GROUND POINTS

CODE	SEE PAGE	GROUND POINTS LOCATION
EB	30	FRONT SIDE OF THE LEFT FENDER
EC	30	RIGHT SIDE OF THE SURGE TANK
ID	32	LEFT KICK PANEL
IE	32	INSTRUMENT PANEL BRACE LH

: SPLICE POINTS

CODE	SEE PAGE	WIRE HARNESS WITH SPLICE POINTS	CODE	SEE PAGE	WIRE HARNESS WITH SPLICE POINTS
I 5	34	INSTRUMENT PANEL WIRE	I 9	34	INSTRUMENT PANEL WIRE
I 7			I18	34	ENGINE WIRE
I 8			I19		

C 8 (A) BROWN

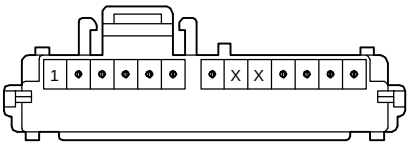

(USA, CANADA) C 9 (B)

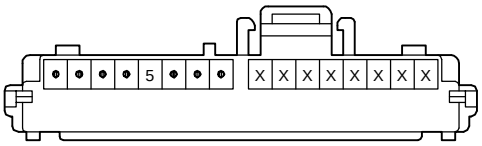

(PUERTO RICO) C 9 (B)

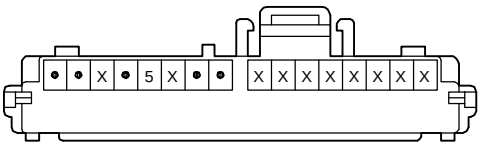

(USA, CANADA) C10 (C) GRAY

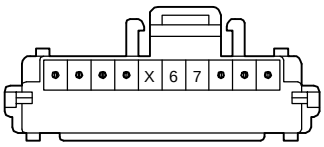

(PUERTO RICO) C10 (C) GRAY

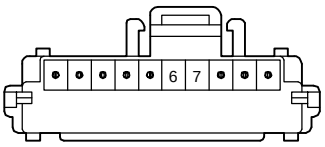

C15 GREEN

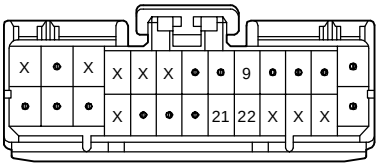

D 1 BLACK

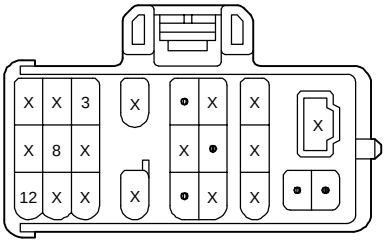

E 1 BLACK

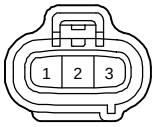

E 2 GREEN



E 4 (A)

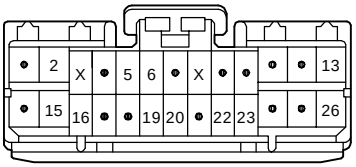

(W/ CRUISE CONTROL) E 5 (B)

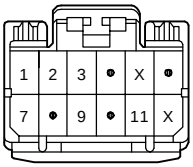

(W/O CRUISE CONTROL) E 5 (B)

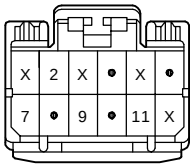

E 6 (C)

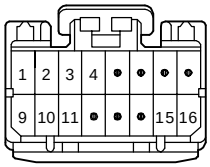

I 9 DARK GRAY



I10

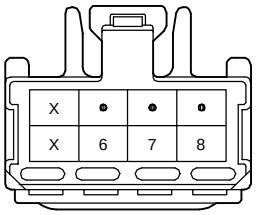

J 3 BLUE

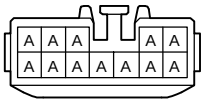

(HINT : SEE PAGE 7)

J 5 GRAY

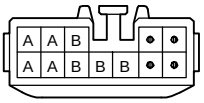

(HINT : SEE PAGE 7)

J 6 GRAY

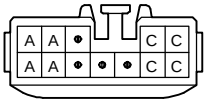

(HINT : SEE PAGE 7)

M 1 BLACK

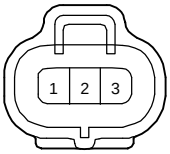

O 2

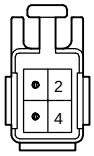

P 1 GRAY

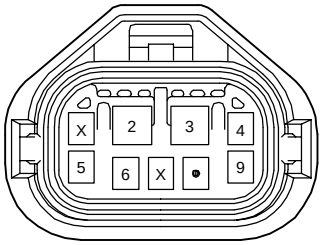

(W/CRUISE CONTROL) S 4

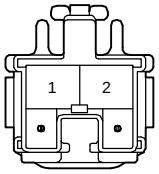

(W/O CRUISE CONTROL) S 4

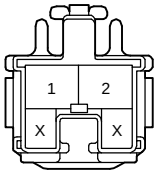

T 2 BLACK

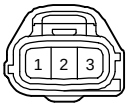

V 1 GRAY

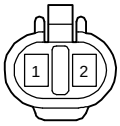

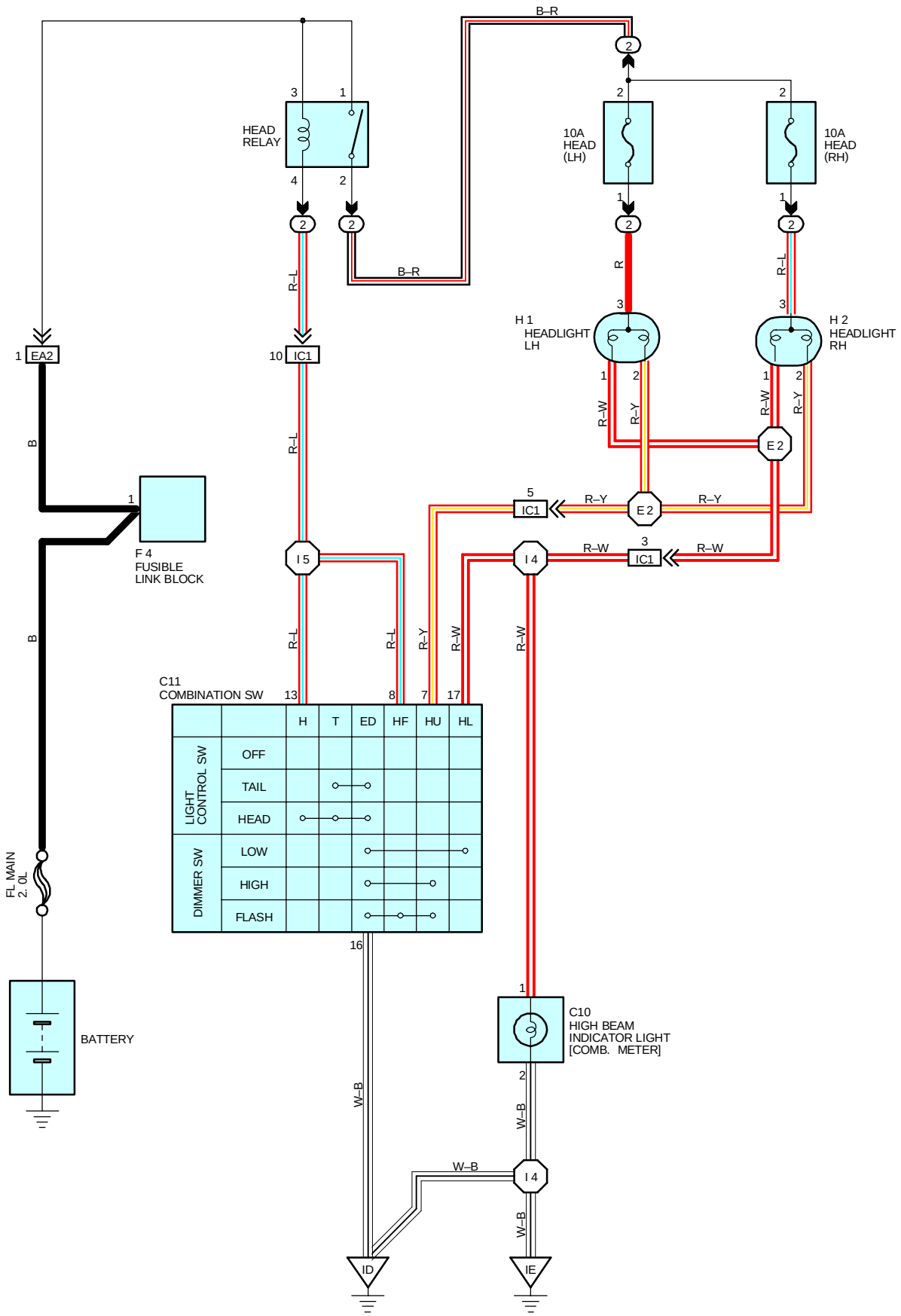
B–R
HEAD RELAY
3
1
4
2
10A HEAD (LH)
10A HEAD (RH)
R–L
B–R
R
H 1 HEADLIGHT LH
H 2 HEADLIGHT RH
R–W
R–Y
E 2
1 EA2
10 IC1
5 IC1
3 IC1
B
F 4 FUSIBLE LINK BLOCK
I 5
I 4
C11 COMBINATION SW
13
8
7
17
H
T
ED
HF
HU
HL
LIGHT CONTROL SW
OFF
TAIL
HEAD
DIMMER SW
LOW
HIGH
FLASH
16
FL MAIN 2. 0L
BATTERY
C10 HIGH BEAM INDICATOR LIGHT [COMB. METER]
W–B
ID
IE

SERVICE HINTS

HEAD RELAY

②1–②2 : CLOSED WITH THE LIGHT CONTROL SW AT **HEAD** POSITION OR THE DIMMER SW AT **FLASH** POSITION

C11 COMBINATION SW

13–16 : CLOSED WITH THE LIGHT CONTROL SW AT **HEAD** POSITION
7–16 : CLOSED WITH THE DIMMER SW AT **HIGH** OR **FLASH** POSITION
8–16 : CLOSED WITH THE DIMMER SW AT **FLASH** POSITION

○ : PARTS LOCATION

CODE	SEE PAGE	CODE	SEE PAGE	CODE	SEE PAGE
C10	26	F4	24	H2	24
C11	26	H1	24		

▭ : RELAY BLOCKS

CODE	SEE PAGE	RELAY BLOCKS (RELAY BLOCK LOCATION)
2	22	ENGINE ROOM R/B (ENGINE COMPARTMENT LEFT)

▭ : CONNECTOR JOINING WIRE HARNESS AND WIRE HARNESS

CODE	SEE PAGE	JOINING WIRE HARNESS AND WIRE HARNESS (CONNECTOR LOCATION)
ID	32	ENGINE WIRE AND ENGINE ROOM MAIN WIRE (INSIDE OF THE ENGINE ROOM R/B)
IE	32	INSTRUMENT PANEL WIRE AND ENGINE ROOM MAIN WIRE (LEFT KICK PANEL)

▽ : GROUND POINTS

CODE	SEE PAGE	GROUND POINTS LOCATION
ID	32	LEFT KICK PANEL
IE	32	INSTRUMENT PANEL BRACE LH

⬡ : SPLICE POINTS

CODE	SEE PAGE	WIRE HARNESS WITH SPLICE POINTS	CODE	SEE PAGE	WIRE HARNESS WITH SPLICE POINTS
E2	30	ENGINE ROOM MAIN WIRE	I5	34	INSTRUMENT PANEL WIRE
I4	34	INSTRUMENT PANEL WIRE			

(USA) C10 GRAY

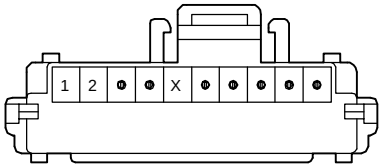

(PUERTO RICO) C10 GRAY

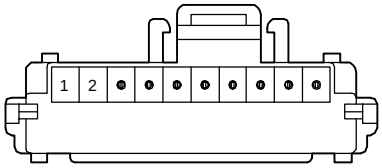

C11

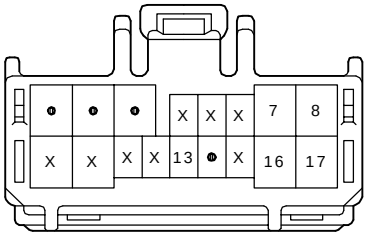

F 4

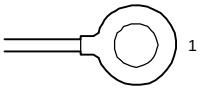

H 1 GRAY

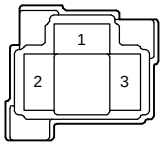

H 2 GRAY

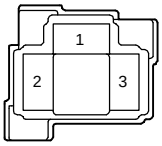

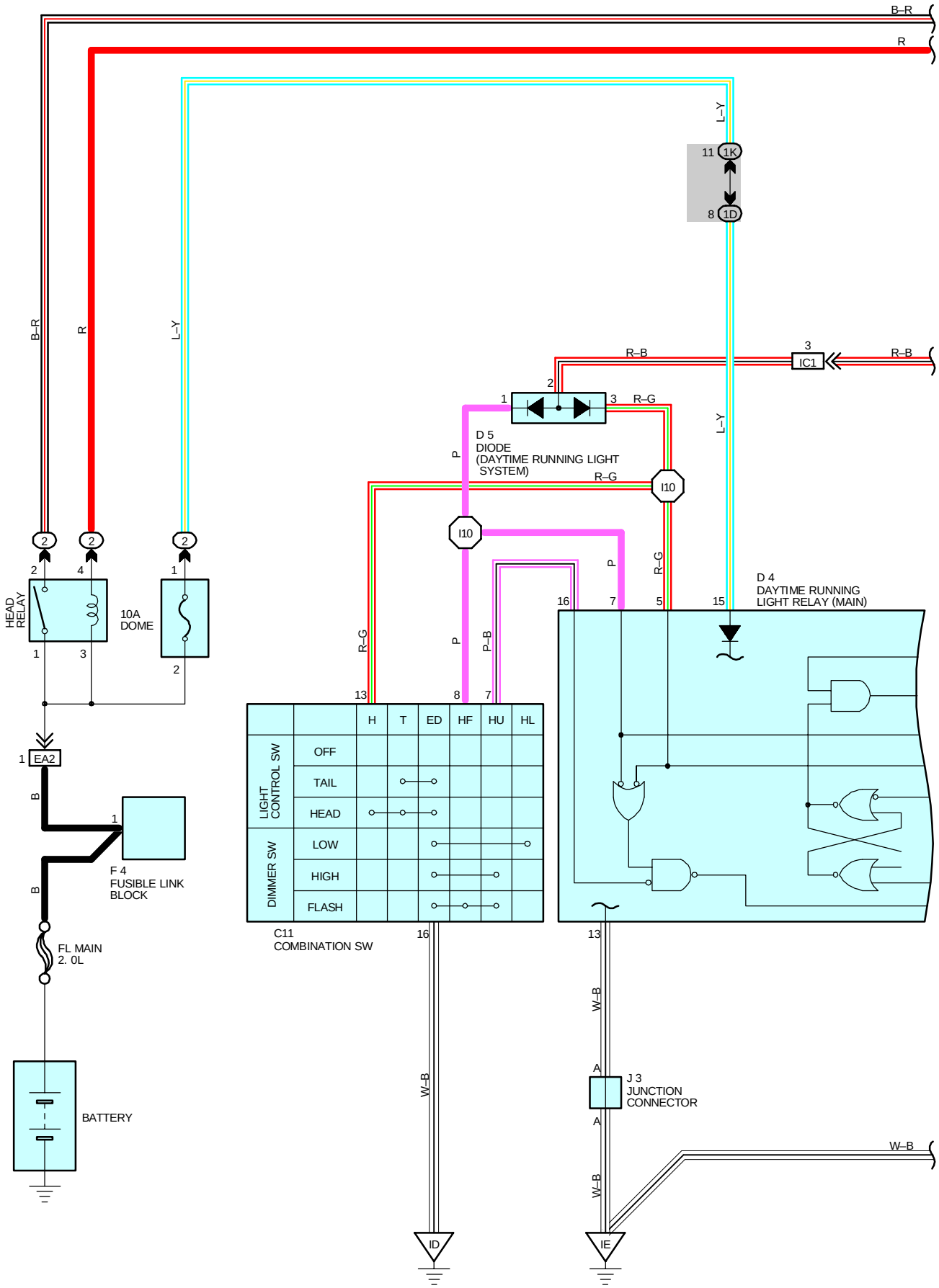
B–R
R
L–Y
11 1K
8 1D
R–B
3 IC1
R–B
2
1
3 R–G
D 5
DIODE
(DAYTIME RUNNING LIGHT
SYSTEM)
P
R–G
I10
I10
P
R–G
D 4
DAYTIME RUNNING
LIGHT RELAY (MAIN)
16
7
5
15
HEAD
RELAY
10A
DOME
2
4
1
3
2
1
EA2
B
1
F 4
FUSIBLE LINK
BLOCK
B
FL MAIN
2. 0L
BATTERY
R–G
P
P–B
13
8
7
H
T
ED
HF
HU
HL
LIGHT
CONTROL SW
OFF
TAIL
HEAD
DIMMER SW
LOW
HIGH
FLASH
C11
COMBINATION SW
16
13
W–B
W–B
A
J 3
JUNCTION
CONNECTOR
A
W–B
W–B
ID
IE

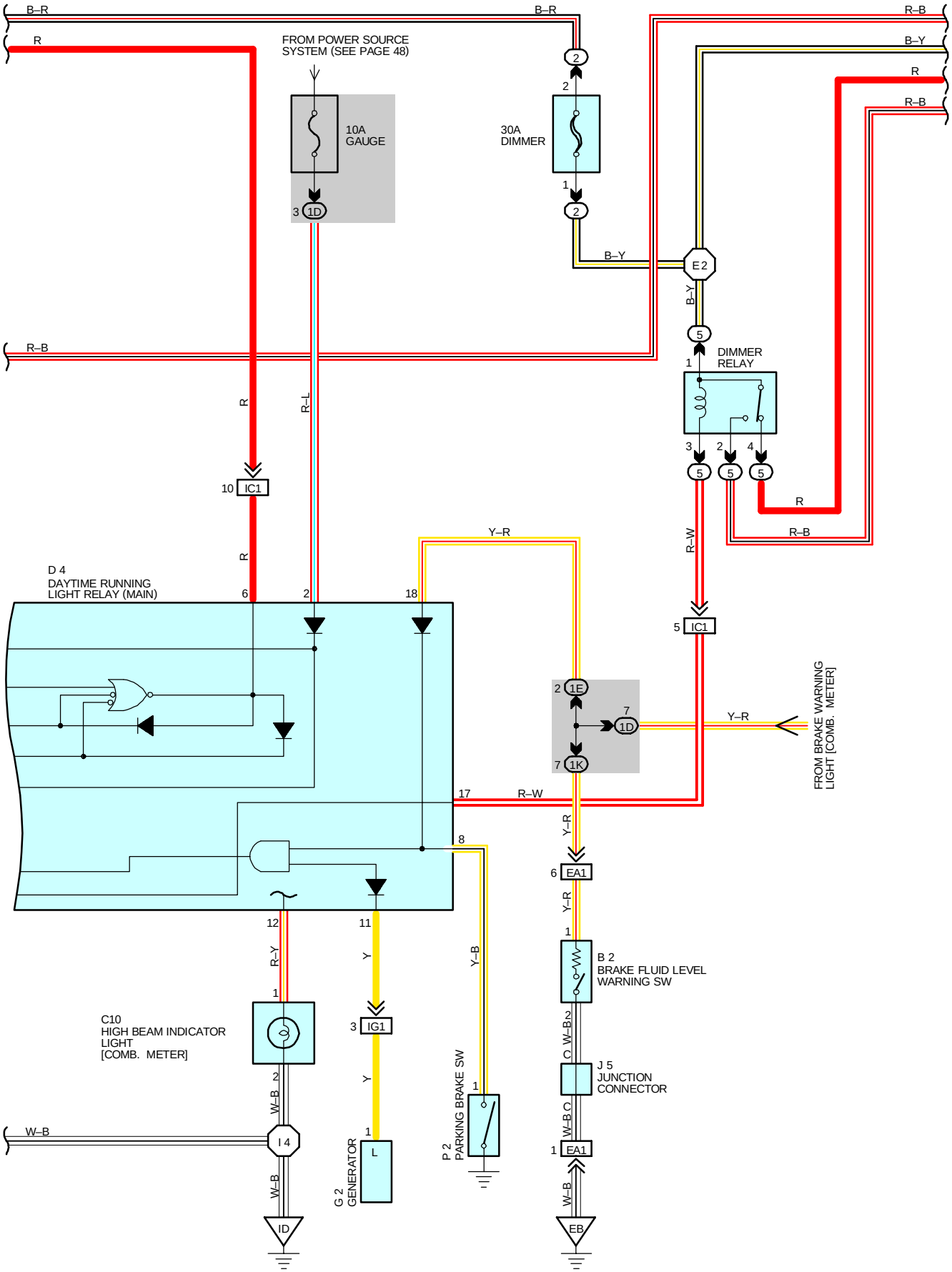
B–R
B–R
R–B
R
FROM POWER SOURCE SYSTEM (SEE PAGE 48)
B–Y
R
R–B
10A GAUGE
30A DIMMER
3 1D
2
2
1
2
B–Y
E 2
B–Y
5
DIMMER RELAY
1
R–B
R
R–L
3
2
4
5
5
5
10 IC1
R
R
R–B
R–W
Y–R
D 4
DAYTIME RUNNING LIGHT RELAY (MAIN)
6
2
18
5 IC1
2 1E
7
1D
7 1K
Y–R
FROM BRAKE WARNING LIGHT [COMB. METER]
17
R–W
8
Y–R
6 EA1
Y–R
12
11
1
B 2
BRAKE FLUID LEVEL WARNING SW
R–Y
Y
Y–B
C10
HIGH BEAM INDICATOR LIGHT [COMB. METER]
3 IG1
W–B 2
J 5
JUNCTION CONNECTOR
2
W–B
Y
W–B
W–B
I 4
1
L
P 2
PARKING BRAKE SW
1
1 EA1
G 2
GENERATOR
W–B
W–B
ID
EB

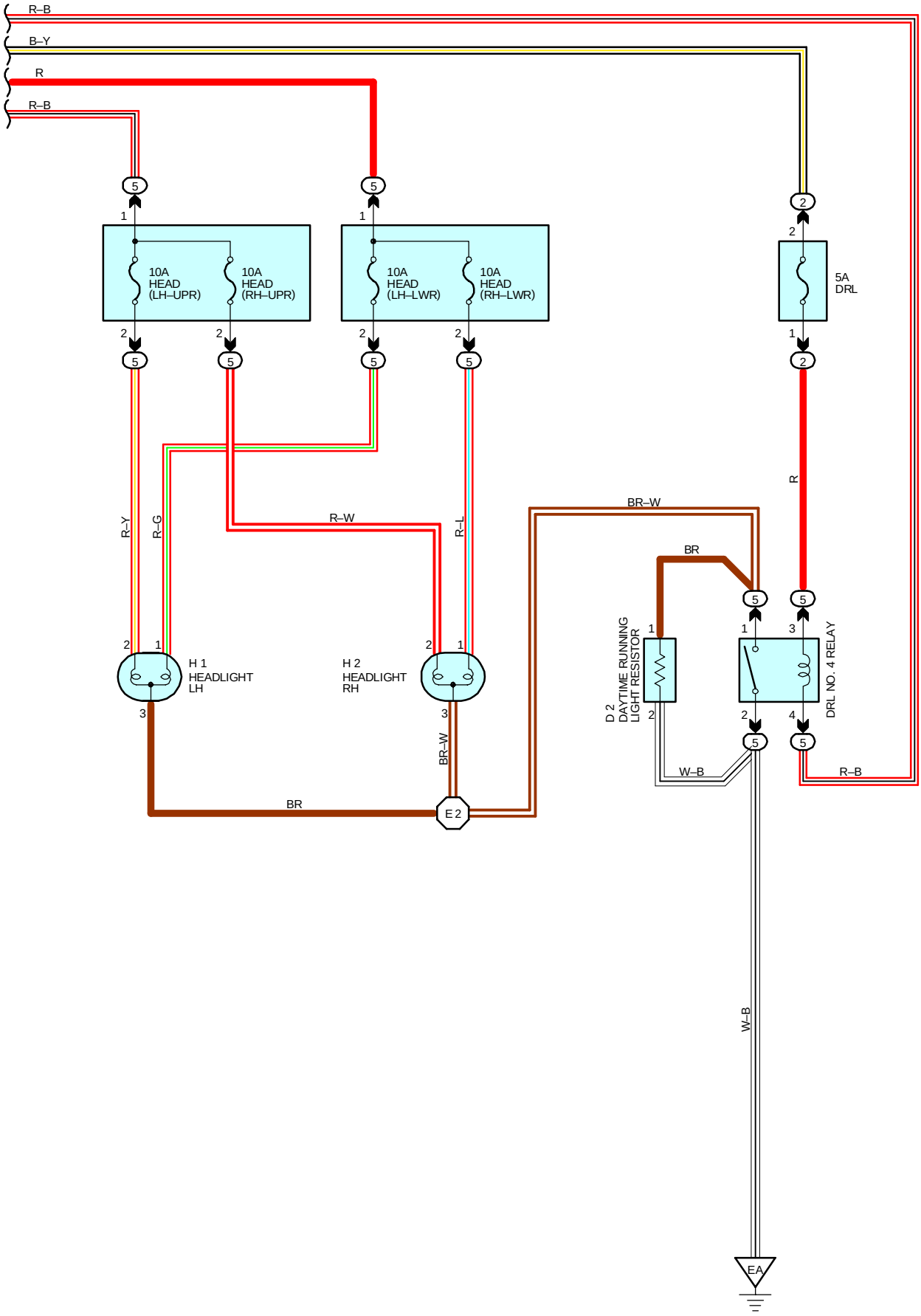
R–B
B–Y
R
R–B
10A HEAD (LH–UPR)
10A HEAD (RH–UPR)
10A HEAD (LH–LWR)
10A HEAD (RH–LWR)
5A DRL
R–Y
R–G
R–W
R–L
BR–W
BR
R
H 1 HEADLIGHT LH
H 2 HEADLIGHT RH
D 2 DAYTIME RUNNING LIGHT RESISTOR
DRL NO. 4 RELAY
BR–W
BR
W–B
R–B
E 2
W–B
EA

SYSTEM OUTLINE

1. DAYTIME RUNNING LIGHT OPERATION

WHEN THE ENGINE IS STARTED, VOLTAGE GENERATED AT **TERMINAL L** OF THE GENERATOR IS APPLIED TO **TERMINAL 11** OF THE DAYTIME RUNNING LIGHT RELAY (MAIN). IF THE PARKING BRAKE LEVER IS PULLED UP (PARKING BRAKE SW ON) AT THIS TIME, THE RELAY IS NOT ACTIVATED SO THE DAYTIME RUNNING LIGHT SYSTEM DOES NOT OPERATE. IF THE PARKING BRALE LEVER IS THEN RELEASED (PARKING BRAKE SW OFF), A SIGNAL IS INPUT TO **TERMINAL 8** OF THE RELAY.

THIS ACTIVATES THE RELAY, SO THE CURRENT FLOWS FROM FL MAIN TO THE HEAD RELAY (POINT SIDE) → DIMMER FUSE → **TERMINAL 1** OF THE DIMMER RELAY → **TERMINAL 4** → **HEAD (LH–LWR)**, **(RH–LWR)** FUSE → **TERMINAL 1** OF THE HEADLIGHTS → **TERMINAL 3** → **TERMINAL 1** OF THE DAYTIME RUNNING LIGHT RESISTOR → **TERMINAL 2** → GROUND, CAUSING THE HEADLIGHTS TO LIGHT UP (HEADLIGHTS LIGHT UP DIMMER THAN NORMAL BRIGHTNESS.). ONCE THE DAYTIME RUNNING LIGHT SYSTEM OPERATES AND HEADLIGHTS LIGHT UP, HEADLIGHTS REMAIN ON EVEN IF THE PARKING BRALE LEVER IS PULLED UP (PARKING BRAKE SW ON).

IF THE ENGINE STALLS AND THE IGNITION SW REMAINS ON, HEADLIGHTS REMAIN LIGHT UP EVEN THOUGH CURRENT IS NO LONGER OUTPUT FROM **TERMINAL 1** OF THE GENERATOR. IF THE IGNITION SW IS THEN TURNED OFF, THE HEADLIGHTS GO OFF.

IF THE ENGINE IS STARTED WITH THE PARKING BRAKE LEVER RELEASED (PARKING BRAKE SW OFF), THE DAYTIME RUNNING LIGHT SYSTEM OPERATES AND HEADLIGHTS LIT UP WHEN THE ENGINE STARTS.

2. HEADLIGHT OPERATION

WHEN THE LIGHT CONTROL SW IS SWITCHED TO HEAD POSITION, THE CURRENT FLOWS FROM THE DRL FUSE TO **TERMINAL 3** OF THE DRL NO. 4 RELAY→ **TERMINAL 4** → **TERMINAL 2** OF THE DIODE (DAYTIME RUNNING LIGHT SYSTEM) → **TERMINAL 3** → **TERMINAL 13** OF THE LIGHT CONTROL SW → **TERMINAL 16** → **GROUND**, ACTIVATING THE DRL NO. 4 RELAY. CURRENT THEN FLOWS FROM THE HEAD (LH–LWR), (RH–LWR) FUSE TO **TERMINAL 1** OF THE HEADLIGHTS → **TERMINAL 3** → **TERMINAL 1** OF THE DRL NO. 4 RELAY→ **TERMINAL 2** → **GROUND**, CAUSING HEADLIGHTS TO LIGHT UP AT NORMAL INTENSITY.

WHEN THE DIMMER SW IS SWITCHED TO THE HIGH SIDE, THE SIGNAL FROM THE DIMMER SW IS INPUT TO THE DAYTIME RUNNING LIGHT RELAY. THIS ACTIVITES THE RELAY AND THE CURRENT FLOWS FROM **TERMINAL 1** OF THE DIMMER RELAY TO **TERMINAL 3** → **TERMINAL 17** OF THE DAYTIME RUNNING LIGHT RELAY (MAIN), ACTIVATING THE DIMMER RELAY. THIS CAUSES THE CURRENT TO FLOW FROM **TERMINAL 1** OF THE DIMMER RELAY TO **TERMINAL 2** → **HEAD (LH–UPR**), **(RH–UPR)** FUSE→ **TERMINAL 2** OF THE HEADLIGHTS → **TERMINAL 3** → **TERMINAL 1** OF THE DRL NO. 4 RELAY → **TERMINAL 2** → **GROUND**, CAUSING HEADLIGHTS TO LIGHT UP AT HIGH BEAM.

WHEN THE DIMMER SW IS SWITCHED TO FLASH POSITION, THE DAYTIME RUNNING LIGHT RELAY IS ACTIVATED AND THE CURRENT FROM THER **DIMMER** FUSE FLOWS THROUGH THE DRL FUSE **TERMINAL 3** OF THE DRL NO. 4 RELAY → **TERMINAL 4** → **TERMINAL 2** OF THE DIODE (DAYTIME RUNNING LIGHT SYSTEM) → **TERMINAL 1** → **TERMINAL 8** OF THE DIMMER SW → **TERMINAL16** → **GROUND**. THEN THE CURRENT FROM THE **DIMMER** FUSE ALSO FLOWS TO **TERMINAL 1** OF THE DIMMER RELAY → **TERMINAL 2** → **TERMINAL 1** OF THE **HEAD (LH–UPR)**, **(RH–UPR)** FUSE → **TERMINAL 2**→ **TERMINAL 2** OF THE HEADLIGHTS → **TERMINAL 3** → **TERMINAL 1 OF THE DRL NO. 4 RELAY** → **TERMINAL 2** → **GROUND**, CAUSING HEADLIGHTS TO LIGHT UP AT HIGH BEAM.

SERVICE HINTS

HEAD RELAY

(2) 1–**(2)** CLOSED WITH THE LIGHT CONTROL SW AT HEAD POSITION OR THE DIMMER SW AT FLASH POSITION
CLOSE WITH THE ENGINE RUNNING AND THE PARKING BRAKE LEVER IS RELEASED (PARKING BRAKE SW OFF)

○ : PARTS LOCATION

CODE	SEE PAGE	CODE	SEE PAGE	CODE	SEE PAGE
B 2	24	D 5	26	J 3	27
C10	26	F 4	24	J 5	27
C11	26	G 2	24	P 2	27
D 2	24	H 1	24		
D 4	26	H 2	24		

⬭ : RELAY BLOCKS

CODE	SEE PAGE	RELAY BLOCKS (RELAY BLOCK LOCATION)
2	22	ENGINE ROOM R/B (ENGINE COMPARTMENT LEFT)
5	23	ENGINE ROOM R/B NO. 5 (ENGINE COMPARTMENT LEFT)

⬭ : JUNCTION BLOCK AND WIRE HARNESS CONNECTOR

CODE	SEE PAGE	JUNCTION BLOCK AND WIRE HARNESS (CONNECTOR LOCATION)
1D	20	INSTRUMENT PANEL WIRE AND DRIVER SIDE J/B (LEFT KICK PANEL)
1E		
1K	20	ENGINE ROOM MAIN WIRE AND DRIVER SIDE J/B (LEFT KICK PANEL)

HEADLIGHT (CANADA)

: CONNECTOR JOINING WIRE HARNESS AND WIRE HARNESS

CODE	SEE PAGE	JOINING WIRE HARNESS AND WIRE HARNESS (CONNECTOR LOCATION)
EA1	30	ENGINE WIRE AND ENGINE ROOM MAIN WIRE (INSIDE OF THE ENGINE ROOM R/B)
EA2		
IC1	32	INSTRUMENT PANEL WIRE AND ENGINE ROOM MAIN WIRE (LEFT KICK PANEL)
IG1	34	ENGINE WIRE AND INSTRUMENT PANEL WIRE (NEAR THE BLOWER UNIT)

: GROUND POINTS

CODE	SEE PAGE	GROUND POINTS LOCATION
EA	30	FRONT SIDE OF THE RIGHT FENDER
EB	30	FRONT SIDE OF THE LEFT FENDER
ID	32	LEFT KICK PANEL
IE	32	INSTRUMENT PANEL BRACE LH

: SPLICE POINTS

CODE	SEE PAGE	WIRE HARNESS WITH SPLICE POINTS	CODE	SEE PAGE	WIRE HARNESS WITH SPLICE POINTS
E 2	30	ENGINE ROOM MAIN WIRE	I10	34	INSTRUMENT PANEL WIRE
I 4	34	INSTRUMENT PANEL WIRE			

B 2 GRAY

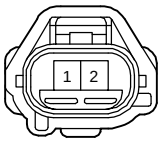

C10 GRAY

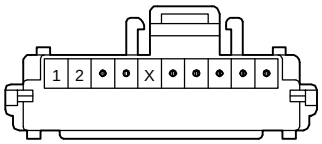

C11

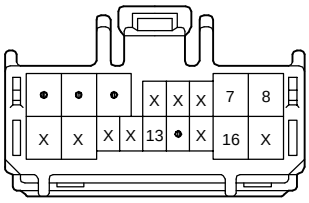

D 2 GRAY

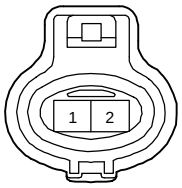

D 4 GRAY

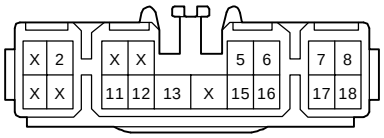

D 5

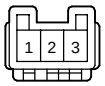

F 4

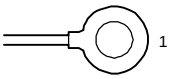

G 2 BLACK

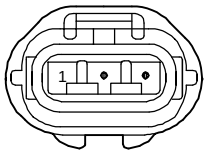

H 1 GRAY

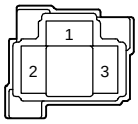

H 2 GRAY

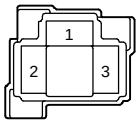

J 3 BLUE

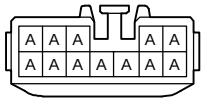

(HINT : SEE PAGE 7)

J 5 GRAY

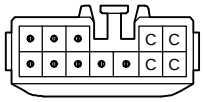

(HINT : SEE PAGE 7)

P 2 BLACK



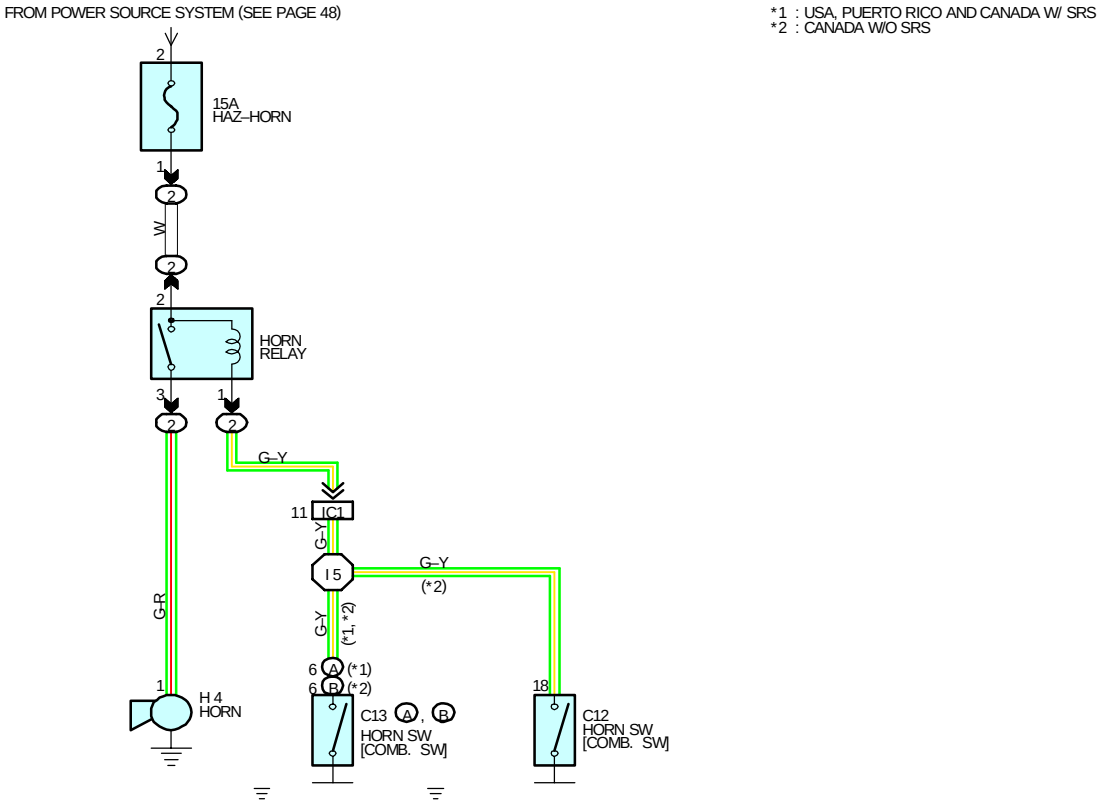

SERVICE HINTS

HORN RELAY

(2) 2– (2) 3 : CLOSED WITH THE HORN SW (COMB. SW) ON

○ : PARTS LOCATION

CODE	SEE PAGE	CODE	SEE PAGE	CODE	SEE PAGE
C12	26	C13 B	26		
C13 A	26	H 4	24		

▭ : RELAY BLOCKS

CODE	SEE PAGE	RELAY BLOCKS (RELAY BLOCK LOCATION)
2	22	ENGINE ROOM R/B (ENGINE COMPARTMENT LEFT)

▭ : CONNECTOR JOINING WIRE HARNESS AND WIRE HARNESS

CODE	SEE PAGE	JOINING WIRE HARNESS AND WIRE HARNESS (CONNECTOR LOCATION)
IC1	32	INSTRUMENT PANEL WIRE AND ENGINE ROOM MAIN WIRE (LEFT KICK PANEL)

(*2) C12 BLACK

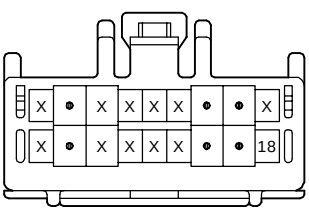

(USA, CANADA W/ SRS) C13 (A) BLACK

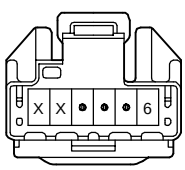

(PUERTO RICO) C13 (A) BLACK

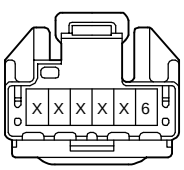

(*2) C13 (B) BLACK

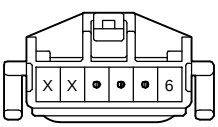

H 4 BLACK

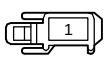

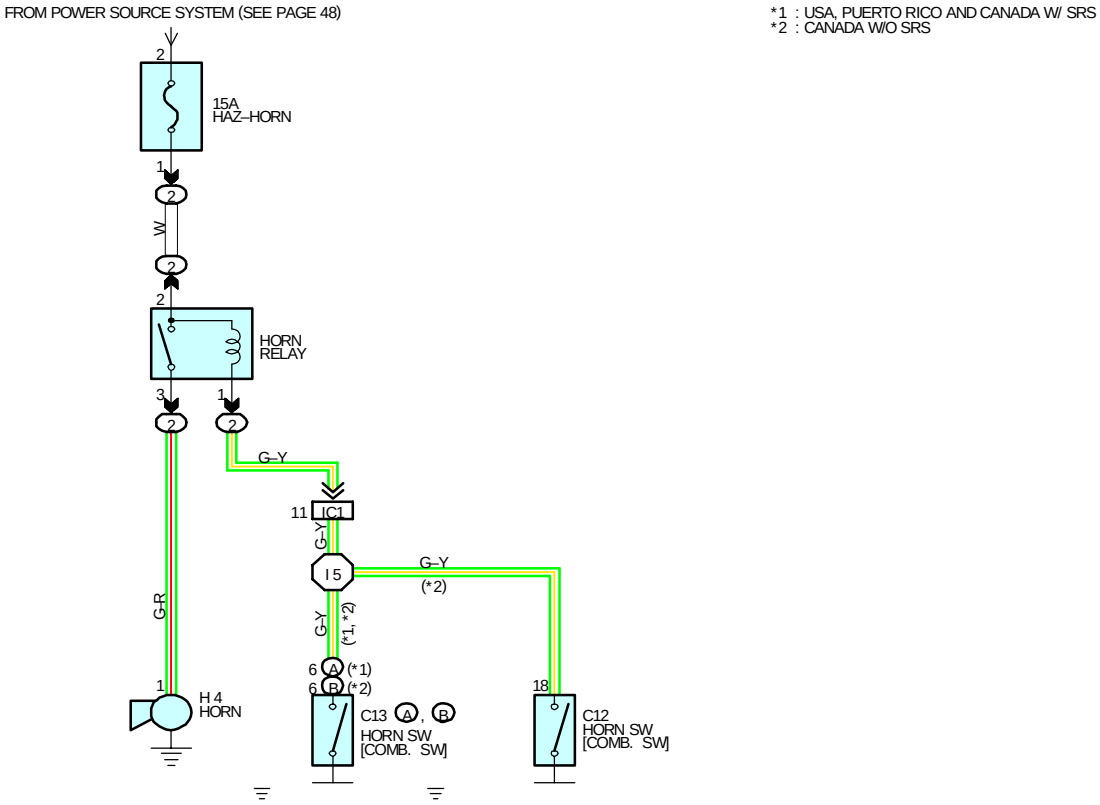

SERVICE HINTS

HORN RELAY

(2) 2– (2) 3 : CLOSED WITH THE HORN SW (COMB. SW) ON

○ : PARTS LOCATION

CODE	SEE PAGE	CODE	SEE PAGE	CODE	SEE PAGE
C12	26	C13 B	26		
C13 A	26	H 4	24		

▭ : RELAY BLOCKS

CODE	SEE PAGE	RELAY BLOCKS (RELAY BLOCK LOCATION)
2	22	ENGINE ROOM R/B (ENGINE COMPARTMENT LEFT)

▭ : CONNECTOR JOINING WIRE HARNESS AND WIRE HARNESS

CODE	SEE PAGE	JOINING WIRE HARNESS AND WIRE HARNESS (CONNECTOR LOCATION)
IC1	32	INSTRUMENT PANEL WIRE AND ENGINE ROOM MAIN WIRE (LEFT KICK PANEL)

(*2) C12 BLACK

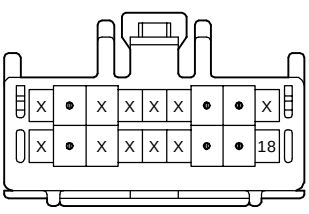

(USA, CANADA W/ SRS) C13 (A) BLACK

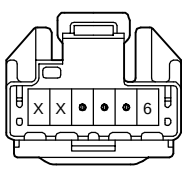

(PUERTO RICO) C13 (A) BLACK

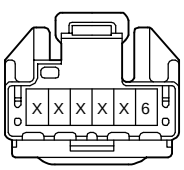

(*2) C13 (B) BLACK

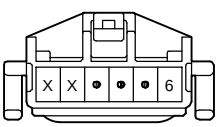

H 4 BLACK

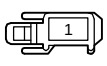

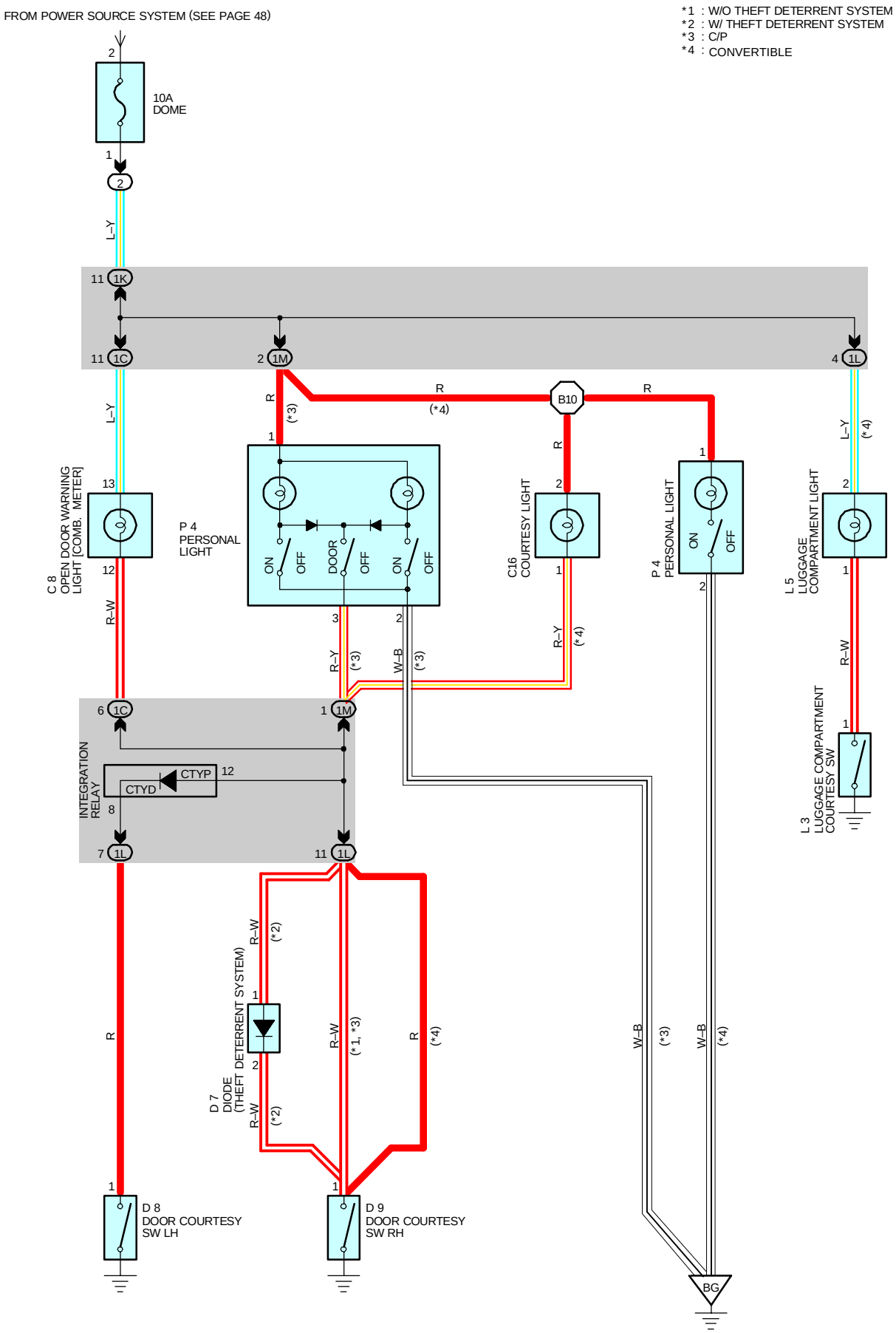
FROM POWER SOURCE SYSTEM (SEE PAGE 48)
*1 : W/O THEFT DETERRENT SYSTEM
*2 : W/ THEFT DETERRENT SYSTEM
*3 : C/P
*4 : CONVERTIBLE
10A DOME
L–Y
R
R–W
R–Y
W–B
(*3)
(*4)
(*2)
(*1, *3)
C 8 OPEN DOOR WARNING LIGHT [COMB. METER]
P 4 PERSONAL LIGHT
ON
OFF
DOOR
C16 COURTESY LIGHT
P 4 PERSONAL LIGHT
L 5 LUGGAGE COMPARTMENT LIGHT
L 3 LUGGAGE COMPARTMENT COURTESY SW
INTEGRATION RELAY
CTYP
CTYD
D 7 DIODE (THEFT DETERRENT SYSTEM)
D 8 DOOR COURTESY SW LH
D 9 DOOR COURTESY SW RH
B10
BG

SERVICE HINTS

D 8, D 9 DOOR COURTESY SW LH, RH
1–GROUND : CLOSED WITH THE DOOR OPEN

: PARTS LOCATION

CODE	SEE PAGE	CODE	SEE PAGE	CODE	SEE PAGE
C 8	26	D 8	28(C/P), 29(CONVERTIBLE)	L 5	28(C/P), 29(CONVERTIBLE)
C16	29(CONVERTIBLE)	D 9	28(C/P), 29(CONVERTIBLE)	P 4	28
D 7	28(C/P)	L 3	28(C/P), 29(CONVERTIBLE)		

: RELAY BLOCKS

CODE	SEE PAGE	RELAY BLOCKS (RELAY BLOCK LOCATION)
2	22	ENGINE ROOM R/B (ENGINE COMPARTMENT LEFT)

: JUNCTION BLOCK AND WIRE HARNESS CONNECTOR

CODE	SEE PAGE	JUNCTION BLOCK AND WIRE HARNESS (CONNECTOR LOCATION)
1C	20	INSTRUMENT PANEL WIRE AND DRIVER SIDE J/B (LEFT KICK PABEL)
1K	20	ENGINE ROOM MAIN WIRE AND DRIVER SIDE J/B (LEFT KICK PANEL)
1L	20	FLOOR WIRE AND DRIVER SIDE J/B (LEFT KICK PANEL)
1M	20	ROOF WIRE AND DRIVER SIDE J/B (LEFT KICK PANEL)

: GROUND POINTS

CODE	SEE PAGE	GROUND POINTS LOCATION
BG	32(C/P) 37(CONVERTIBLE)	RIGHT SIDE OF PERSONAL LIGHT

: SPLICE POINTS

CODE	SEE PAGE	WIRE HARNESS WITH SPLICE POINTS	CODE	SEE PAGE	WIRE HARNESS WITH SPLICE POINTS
B10	36(CONVERTIBLE)	ROOF WIRE			

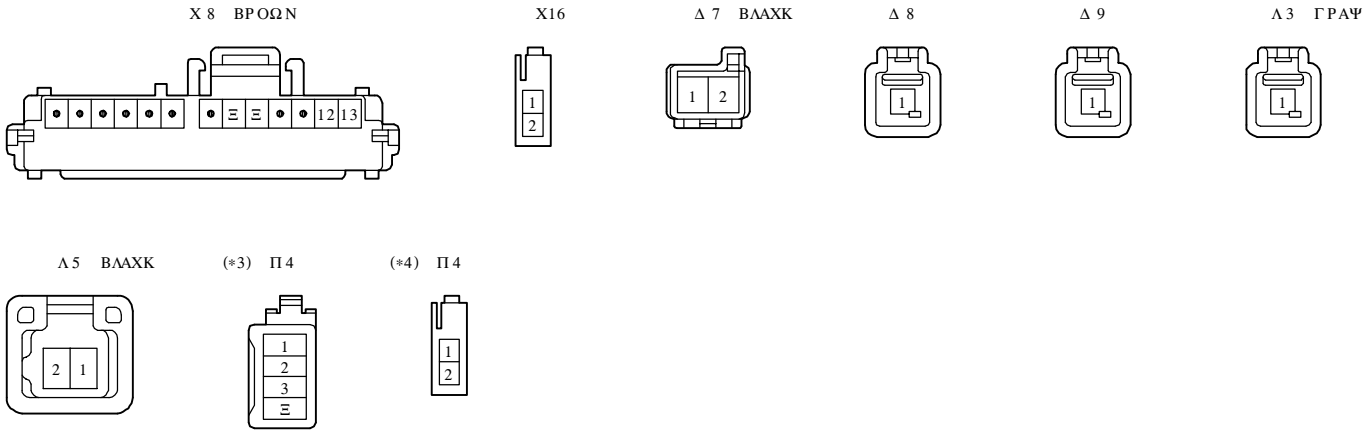

KEY REMINDER AND SEAT BELT WARNING



SYSTEM OUTLINE

CURRENT ALWAYS FLOWS TO **TERMINAL 3** OF THE INTEGRATION RELAY THROUGH THE **DOME** FUSE.

1. SEAT BELT WARNING SYSTEM

WHEN THE IGNITION SW IS TURNED ON, THE CURRENT FLOWS FROM THE **GAUGE** FUSE TO THE **TERMINAL 9** OF THE INTEGRATION RELAY. AT THE SAME TIME, THE CURRENT FLOWS TO **TERMINAL 2** OF THE INTEGRATION RELAY FROM THE **GAUGE** FUSE THROUGH THE SEAT BELT WARNING LIGHT. THIS CURRENT ACTIVATES THE SEAT BELT WARNING RELAY (INTEGRATION RELAY), AND THE CURRENT THROUGH THE SEAT BELT WARNING LIGHT FLOWS FROM **TERMINAL 2** OF THE INTEGRATION RELAY TO **TERMINAL 7** → **GROUND**, CAUSING THE WARNING LIGHT TO LIGHT UP. A BUCKLE SW OR SEAT BELT RETRACTOR SW OFF SIGNAL IS INPUT TO **TERMINAL 5** OF THE RELAY, THE CURRENT FLOWS TO **TERMINAL 3** OF THE RELAY FLOWS FROM **TERMINAL 7** TO **GROUND** AND THE SEAT BELT WARNING BUZZER SOUNDS FOR APPROX. **4–8** SECONDS. HOWEVER, IF SEAT BELT IS PUT ON DURING THIS PERIOD (WHILE THE CUZZER IS SOUNDING), SIGNAL INPUT TO **TERMINAL 5** OF THE INTEGRATION RELAY STOPS AND THE CURRENT FLOW FROM **TERMINAL 3** OF THE INTEGRATION RELAY TO **TERMINAL 7** → **GROUND** IS CUT OFF, CAUSING THE BUZZER TO STOP.

2. KEY REMINDER SYSTEM

WITH THE IGNITION KEY INSERTED IN THE KEY CYLINDER (UNLOCK WARNING SW ON), THE IGNITION SW STILL OFF AND DOOR OPEN (DOOR COURTESY SW ON), WHEN A SIGNAL IS INPUT **TERMINALS 4** AND **8** OF THE INTEGRATION RELAY, THE INTEGRATION RELAY OPERATES, THE CURRENT FLOWS FROM **TERMINAL 3** OF THE INTEGRATION RELAY TO **TERMINAL 7** → **GROUND** AND THE KEY REMINDER BUZZER SOUNDS.

SERVICE HINTS

D8 DOOR COURTESY SW LH

1–GROUND: CLOSED WITH THE DRIVER'S DOOR OPEN

INTEGRATION RELAY

7–GROUND: ALWAYS CONTINUITY
8–GROUND: CONTINUITY WITH THE DRIVER'S DOOR OPEN
3–GROUND: ALWAYS APPROX. 12 VOLTS
5–GROUND: CONTINUITY WITH THE DRIVER'S SEAT BELT IN USE
9–GROUND: APPROX. 12 VOLTS WITH THE IGNITION SW ON

S5 SEAT BELT RETRACTOR SW

1–2: CLOSED WITH THE DRIVER'S SEAT BELT IN USE

U1 UNLOCK WARNING SW

1–2: CLOSED WITH THE IGNITION KEY IN CYLINDER

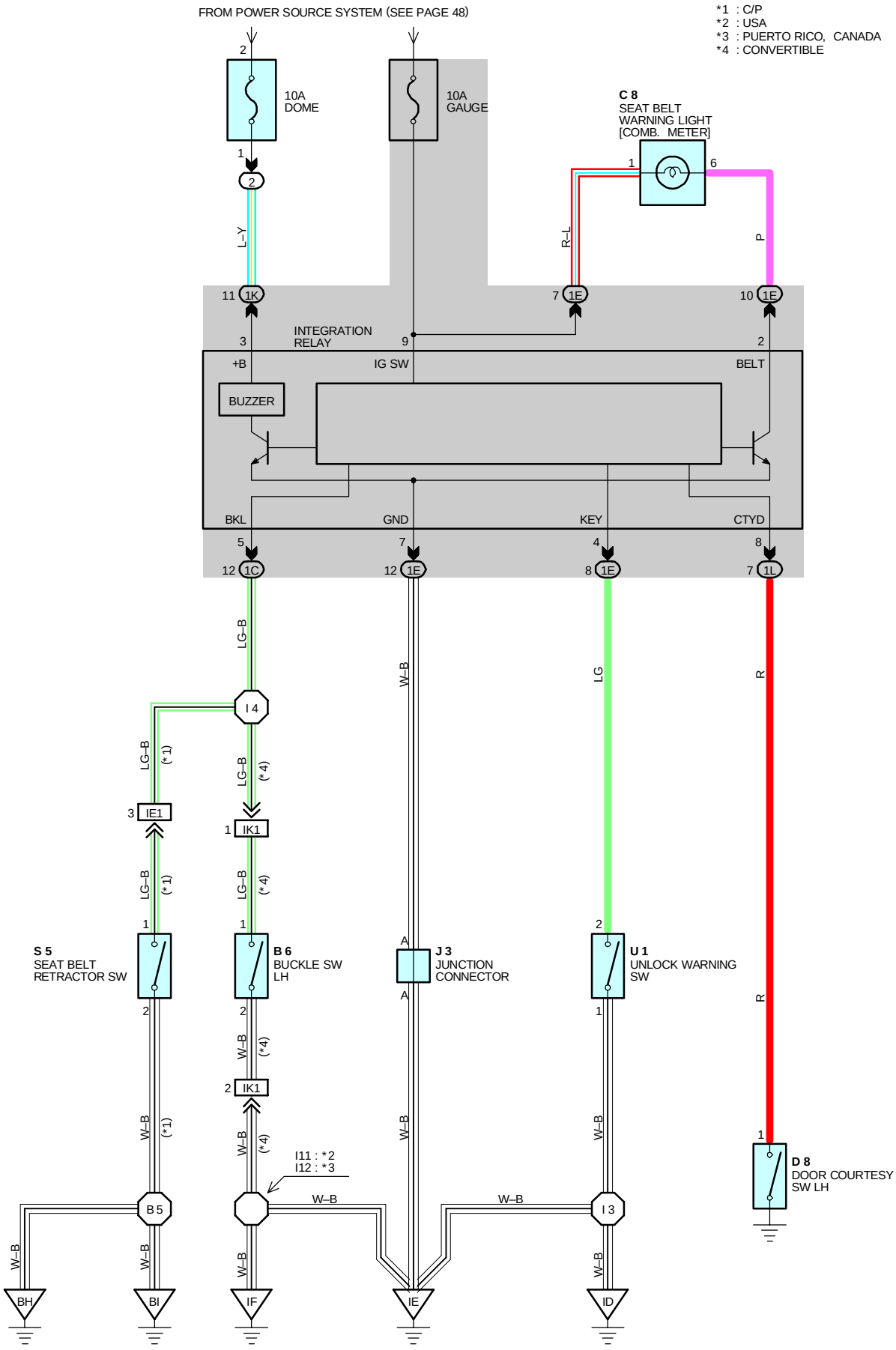
FROM POWER SOURCE SYSTEM (SEE PAGE 48)
*1 : C/P
*2 : USA
*3 : PUERTO RICO, CANADA
*4 : CONVERTIBLE
10A DOME
10A GAUGE
C 8
SEAT BELT WARNING LIGHT [COMB. METER]
L–Y
R–L
P
INTEGRATION RELAY
+B
IG SW
BELT
BUZZER
BKL
GND
KEY
CTYD
LG–B
W–B
LG
R
I 4
IE1
IK1
S 5
SEAT BELT RETRACTOR SW
B 6
BUCKLE SW LH
J 3
JUNCTION CONNECTOR
U 1
UNLOCK WARNING SW
D 8
DOOR COURTESY SW LH
I11 : *2
I12 : *3
B 5
I 3
BH
BI
IF
IE
ID

: PARTS LOCATION

CODE	SEE PAGE	CODE	SEE PAGE	CODE	SEE PAGE
B6	26	D8	28(C/P), 29(CONVERTIBLE)	S5	29 (CONVERTIBLE)
C8	26	J3	27	U1	27

: RELAY BLOCKS

CODE	SEE PAGE	RELAY BLOCKS (RELAY BLOCK LOCATION)
2	22	ENGINE ROOM R/B (ENGINE COMPARTMENT LEFT)

: JUNCTION BLOCK AND WIRE HARNESS CONNECTOR

CODE	SEE PAGE	JUNCTION BLOCK AND WIRE HARNESS (CONNECTOR LOCATION)
1C	20	INSTRUMENT PANEL WIRE AND DRIVER SIDE J/B (LEFT KICK PANEL)
1E		
1K	20	ENGINE ROOM MAIN WIRE AND DRIVER SIDE J/B (LEFT KICK PANEL)
1L	20	FLOOR WIRE AND DRIVER SIDE J/B (LEFT KICK PANEL)

: CONNECTOR JOINING WIRE HARNESS AND WIRE HARNESS

CODE	SEE PAGE	JOINING WIRE HARNESS AND WIRE HARNESS (CONNECTOR LOCATION)
IE1	32	INSTRUMENT PANEL WIRE AND FLOOR WIRE (LEFT KICK PANEL)
IK1	34	FLOOR NO. 3 WIRE AND INSTRUMENT PANEL WIRE (UNDER THE DRIVER'S SEAT)

: GROUND POINTS

CODE	SEE PAGE	GROUND POINTS LOCATION
ID	32	LEFT KICK PANEL
IE	32	INSTRUMENT PANEL BRACE LH
IF	32	RIGHT KICK PANEL
BH	36 (C/P)	LEFT SIDE OF THE QUARTER PILLAR
BI	36 (C/P)	LOWER BACK PANEL CENTER

: SPLICE POINTS

CODE	SEE PAGE	WIRE HARNESS WITH SPLICE POINTS	CODE	SEE PAGE	WIRE HARNESS WITH SPLICE POINTS
I3	34	INSTRUMENT PANEL WIRE	I12	34	INSTRUMENT PANEL WIRE
I11	34	INSTRUMENT PANEL WIRE	B5	36 (C/P)	FLOOR WIRE

B 6

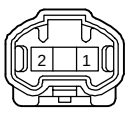

C 8 BROWN

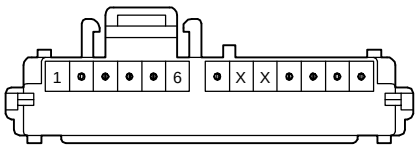

D 8



J 3 BLUE

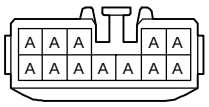

(HINT : SEE PAGE 7)

S 5

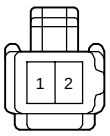

U 1 BLACK

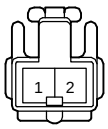

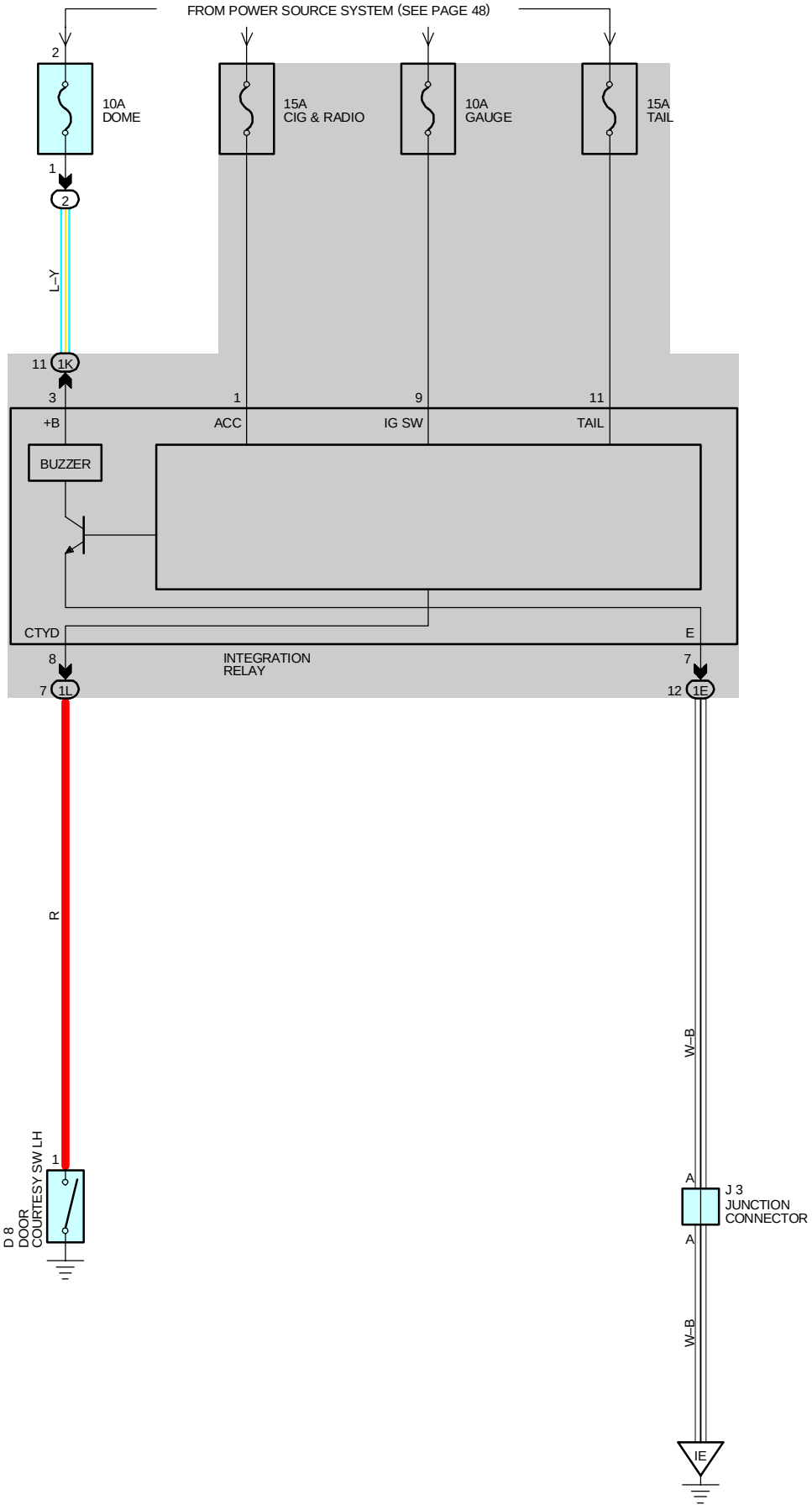
FROM POWER SOURCE SYSTEM (SEE PAGE 48)
2
10A
DOME
15A
CIG & RADIO
10A
GAUGE
15A
TAIL
1
2
L–Y
11
1K
3
+B
1
ACC
9
IG SW
11
TAIL
BUZZER
CTYD
E
8
7
INTEGRATION
RELAY
7
1L
12
1E
R
W–B
D 8
DOOR
COURTESY SW LH
1
A
J 3
JUNCTION
CONNECTOR
A
W–B
IE

SYSTEM OUTLINE

WITH THE IGNITION SW IN ACC POSITION, THE CURRENT FLOWS TO **TERMINAL 1** OF THE INTEGRATION RELAY. WHEN THE IGNITION SW IS TURNED TO ON POSITION, THE CURRENT FLOWS TO **TERMINAL 9** OF THE INTEGRATION RELAY. WHEN THE LIGHT CONTROL SW IS TURNED TO TAIL OR HEAD POSITION, THE CURRENT IS APPLIED TO **TERMINAL 11** OF THE INTEGRATION RELAY.

LIGHT REMINDER SYSTEM

WHEN THE LIGHT SW IS IN THE **TAIL** OR **HEAD** POSITION, IF THE IGNITION SW IS IN OFF POSITION AND THE DRIVER'S DOOR IS OPEN (DOOR COURTESY SW LH ON), THE CURRENT FLOWING **TO TERMINALS 1** AND **9** OF THE INTEGRATION RELAY IS STOPPED. AS A RESULT, THE RELAY IS ACTIVATED AND THE CURRENT FLOWS FROM **TERMINAL 3** OF THE INTEGRATION RELAY TO **TERMINAL 7** → **GROUND**, SOUNDING THE LIGHT REMINDER BUZZER.

SERVICE HINTS

IINTEGRATION RELAY

9–GROUND : APPROX. **12** VOLTS WITH THE IGNITION SW AT **ON** POSITION
1–GROUND : APPROX. **12** VOLTS WITH THE IGNITION SW AT **ACC** OR **ON** POSITION
11–GROUND : APPROX. **12** VOLTS WITH THE LIGHT CONTROL SW AT TAIL OR HEAD POSITION
8–GROUND : CONTINUITY WITH THE DRIVER'S DOOR OPEN

D 8 DOOR COURTESY SW LH

1–GROUND : CONTINUITY WITH THE DRIVER'S DOOR OPEN

○ : PARTS LOCATION

CODE	SEE PAGE	CODE	SEE PAGE	CODE	SEE PAGE
D 8	28 (C/P), 29(CONVERTIBLE)	J 3	27		

⬭ : RELAY BLOCKS

CODE	SEE PAGE	RELAY BLOCKS (RELAY BLOCK LOCATION)
2	22	ENGINE ROOM R/B (ENGINE COMPARTMENT LEFT)

⬭ : JUNCTION BLOCK AND WIRE HARNESS CONNECTOR

CODE	SEE PAGE	JUNCTION BLOCK AND WIRE HARNESS (CONNECTOR LOCATION)
1E	20	INSTRUMENT PANEL WIRE AND DRIVER SIDE J/B (LEFT KICK PANEL)
1K	20	ENGINE ROOM MAIN WIRE AND DRIVER SIDE J/B (LEFT KICK PANEL)
1L	20	FLOOR WIRE AND DRIVER SIDE J/B (LEFT KICK PANEL)

▽ : GROUND POINTS

CODE	SEE PAGE	GROUND POINTS LOCATION
IE	32	INSTRUMENT PANEL BRACE LH

D 8

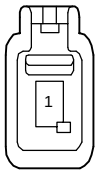

J 3 BLUE

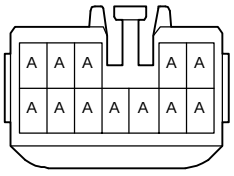

(HINT : SEE PAGE 7)

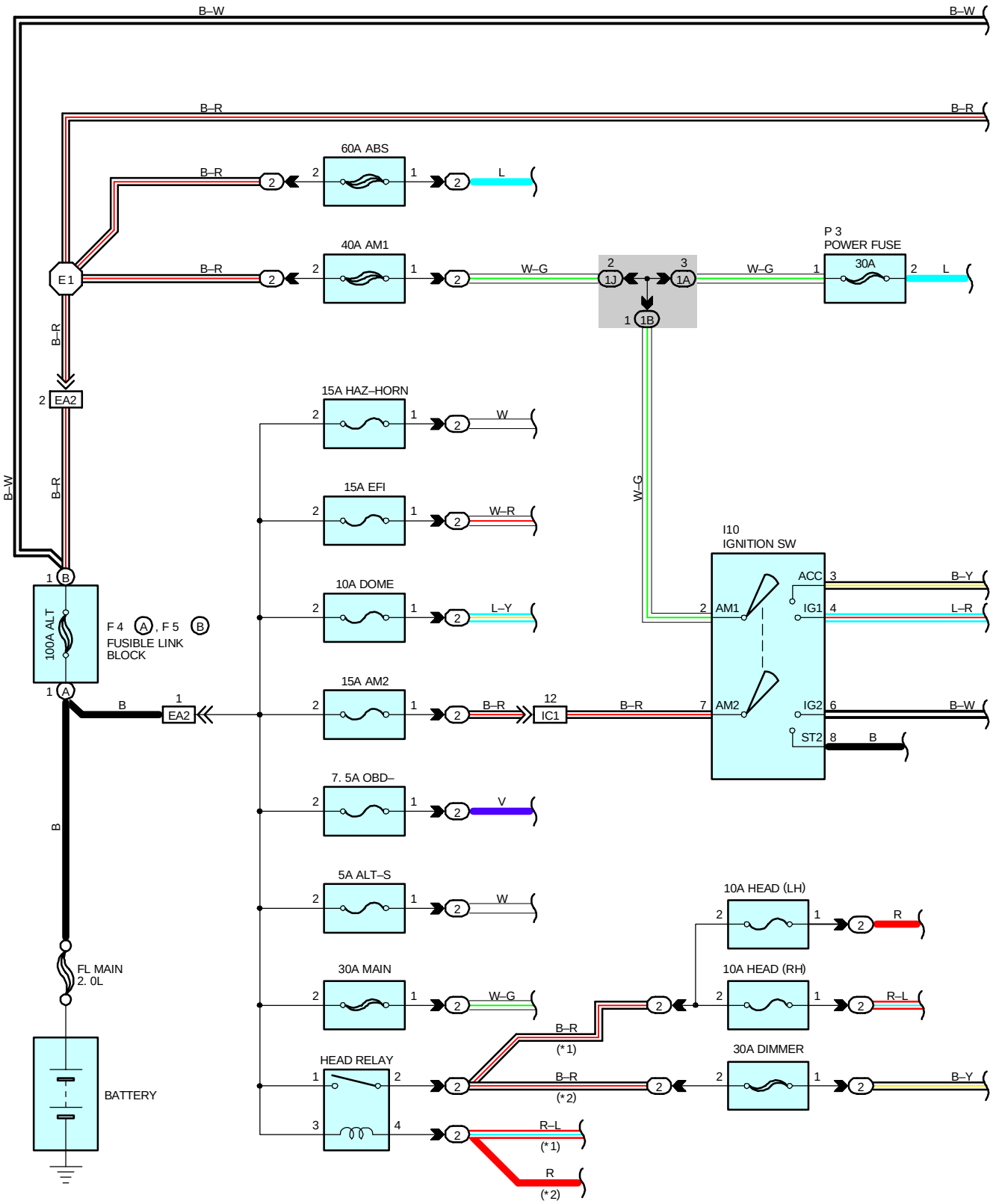
B–W
B–R
60A ABS
40A AM1
P 3
POWER FUSE
30A
E1
2 EA2
15A HAZ–HORN
15A EFI
10A DOME
15A AM2
7. 5A OBD–
5A ALT–S
30A MAIN
HEAD RELAY
I10
IGNITION SW
ACC
IG1
IG2
ST2
AM1
AM2
100A ALT
F 4 A , F 5 B
FUSIBLE LINK
BLOCK
FL MAIN
2. 0L
BATTERY
10A HEAD (LH)
10A HEAD (RH)
30A DIMMER
(*1)
(*2)

*1 : USA, PUERTO RICO
*2 : CANADA

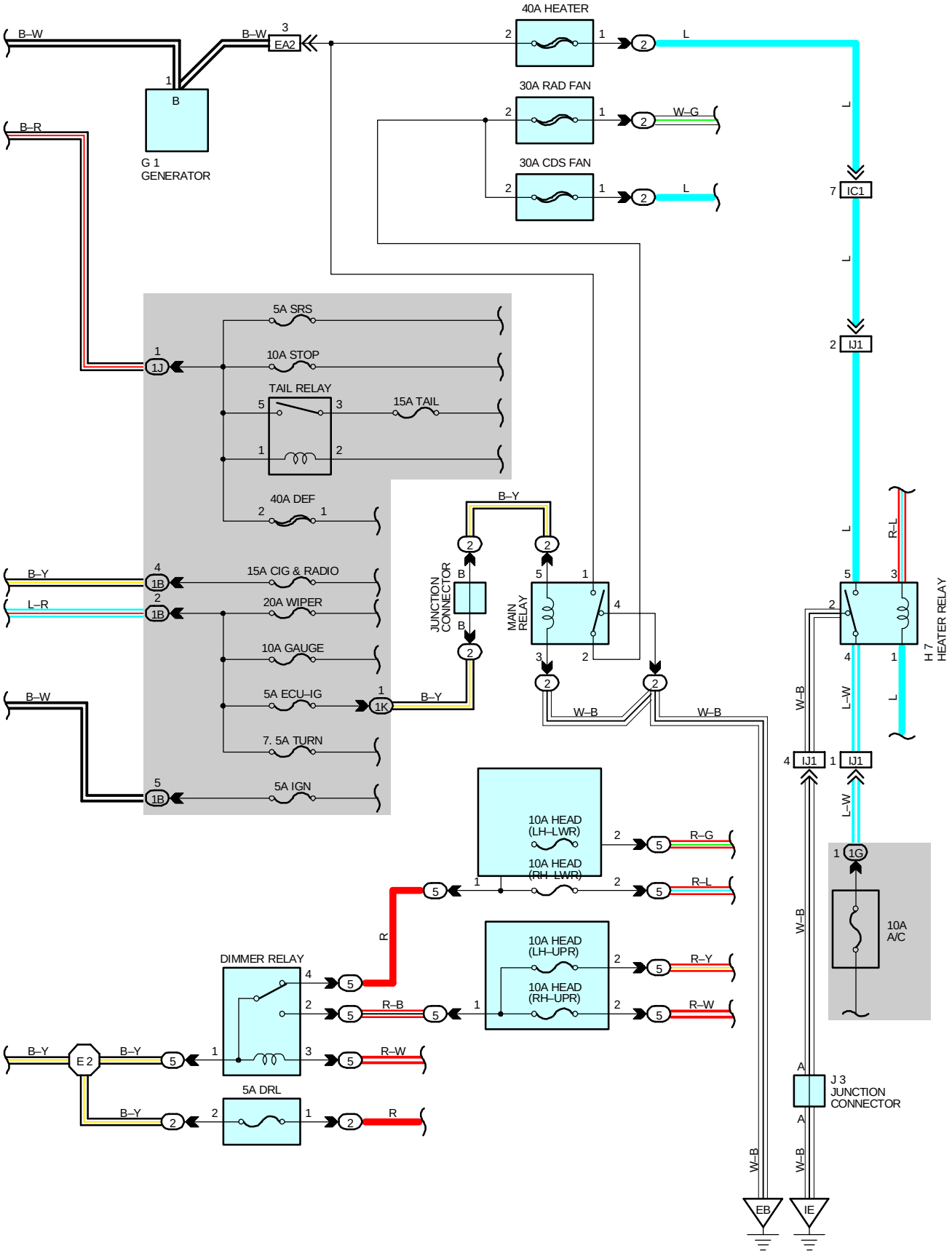

POWER SOURCE

SERVICE HINTS

MAIN RELAY

②5–②4 : CLOSED WITH THE IGNITION SW AT **ON** POSITION

I10 IGNITION SW

2–3 : CLOSED WITH THE IGNITION SW AT **ACC** OR **ON** POSITION

2–4, 7–6 : CLOSED WITH THE IGNITION SW AT **ON** OR **ST** POSITION

: PARTS LOCATION

CODE		SEE PAGE	CODE	SEE PAGE	CODE	SEE PAGE
F4	A	24	H7	26	P3	27
F5	B	24	I10	27		
G1		24	J3	27		

: RELAY BLOCKS

CODE	SEE PAGE	RELAY BLOCKS (RELAY BLOCK LOCATION)
2	22	ENGINE ROOM R/B (ENGINE COMPARTMENT LEFT)
5	23	ENGINE ROOM R/B NO. 5 (ENGINE COMPARTMENT LEFT)

: JUNCTION BLOCK AND WIRE HARNESS CONNECTOR

CODE	SEE PAGE	JUNCTION BLOCK AND WIRE HARNESS (CONNECTOR LOCATION)
1A	20	INSTRUMENT PANEL WIRE AND DRIVER SIDE J/B (LEFT KICK PANEL)
1B		
1G		
1J	20	ENGINE ROOM MAIN WIRE AND DRIVER SIDE J/B (LEFT KICK PANEL)
1K		

: CONNECTOR JOINING WIRE HARNESS AND WIRE HARNESS

CODE	SEE PAGE	JOINING WIRE HARNESS AND WIRE HARNESS (CONNECTOR LOCATION)
EA2	30	ENGINE WIRE AND ENGINE ROOM MAIN WIRE (INSIDE OF THE ENGINE ROOM R/B)
IC1	32	INSTRUMENT PANEL WIRE AND ENGINE ROOM MAIN WIRE (LEFT KICK PANEL)
IJ1	34	INSTRUMENT PANEL NO. 2 WIRE AND INSTRUMENT PANEL WIRE (RIGHT KICK PANEL)

: GROUND POINTS

CODE	SEE PAGE	GROUND POINTS LOCATION
EB	30	FRONT SIDE OF THE LEFT FENDER
IE	32	INSTRUMENT PANEL BRACE LH

: SPLICE POINTS

CODE	SEE PAGE	WIRE HARNESS WITH SPLICE POINTS	CODE	SEE PAGE	WIRE HARNESS WITH SPLICE POINTS
E1	30	ENGINE ROOM MAIN WIRE	E2	30	ENGINE ROOM MAIN WIRE

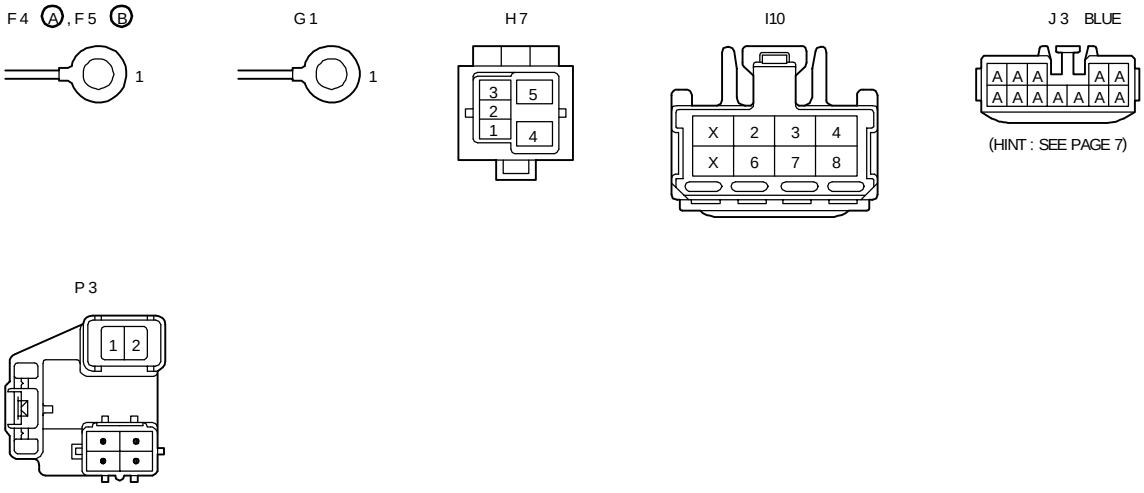

*1 : USA, CANADA
*2 : PUERTO RICO

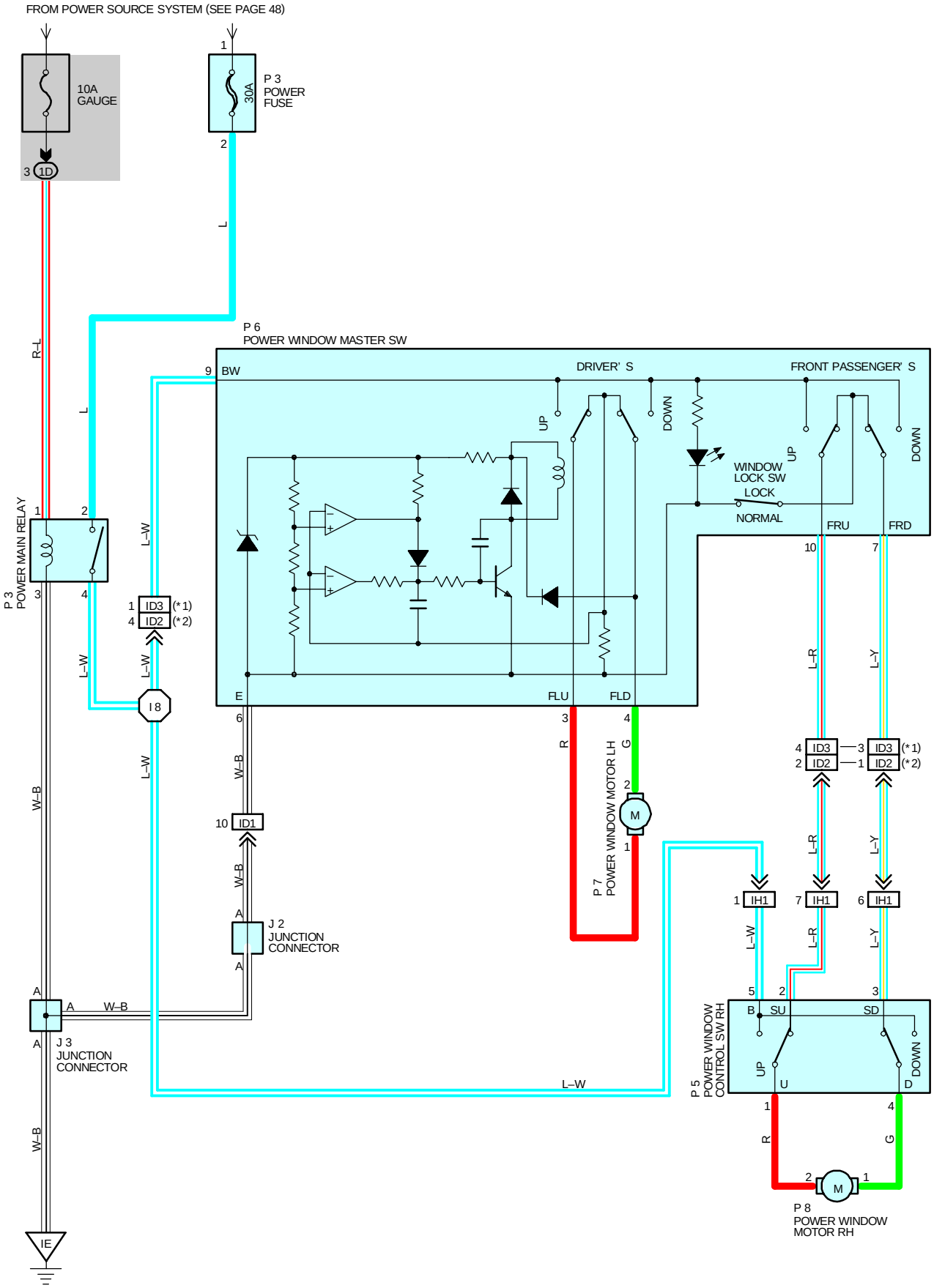

SYSTEM OUTLINE

CURRENT ALWAYS FLOWS **TERMINAL 2** OF THE POWER MAIN RELAY THROUGH THE **POWER** FUSE. WITH THE IGNITION SW TURNED ON, THE CURRENT FLOWS THROUGH THE **GAUGE** FUSE TO **TERMINAL 1** OF THE POWER MAIN RELAY ➔ **TERMINAL 3** ➔ **GROUND**. THIS ACTIVATES THE POWER MAIN RELAY, AND THE CURRENT FLOWING TO **TERMINAL 4** OF THE POWER MAIN RELAY FLOWS TO **TERMINAL 9** OF THE POWER WINDOW MASTER SW AND **TERMINAL 5** OF THE POWER WINDOW CONTROL SW RH.

1. MANUAL OPERATION (DRIVER'S WINDOW)

WITH THE IGNITION SW TURNED ON AND THE POWER WINDOW MASTER SW IN UP POSITION, THE CURRENT TO **TERMINAL 9** OF THE POWER WINDOW MASTER SW FLOWS TO **TERMINAL 3** ➔ **TERMINAL 1** OF THE POWER WINDOW MOTOR LH ➔ MOTOR ➔ **TERMINAL 2** ➔ **TERMINAL 4** OF THE POWER WINDOW MASTER SW ➔ **TERMINAL 6** ➔ **GROUND** AND CAUSES THE POWER WINDOW MOTOR LH TO ROTATE IN THE UP DIRECTION. THE WINDOW ASCENDS ONLY WHILE THE SW IS BEING PULLED. IN DOWN OPERATION, THE CURRENT FROM **TERMINAL 9** OF THE POWER WINDOW MASTER SW FLOWS TO **TERMINAL 4** ➔ **TERMINAL 2** OF THE POWER WINDOW MOTOR LH ➔ MOTOR ➔ **TERMINAL 1** ➔ **TERMINAL 3** OF THE POWER WINDOW MASTER SW ➔ **TERMINAL 6** ➔ **GROUND**, CAUSING THE MOTOR TO ROTATE IN REVERSE, LOWERING THE WINDOW.

2. AUTO DOWN OPERATION (DRIVER'S WINDOW)

WITH THE IGNITION SW ON AND WITH THE DRIVER'S SW OF THE POWER WINDOW MASTER SW IN **DOWN** POSITION, THE CURRENT TO **TERMINAL 9** OF THE POWER WINDOW MASTER SW FLOWS TO **TERMINAL 4** ➔ **TERMINAL 2** OF THE POWER WINDOW MOTOR LH ➔ MOTOR ➔ **TERMINAL 1** ➔ **TERMINAL 3** OF THE POWER WINDOW MASTER SW ➔ **TERMINAL 6** ➔ **GROUND**, CAUSING THE POWER WINDOW MOTOR LH TO ROTATE TOWARDS THE DOWN SIDE. THEN THE SOLENOID IN THE POWER WINDOW MASTER SW IS ACTIVATED AND IT LOCKS THE DRIVER'S SW BEING PUSHED, CAUSING THE POWER WINDOW MOTOR LH TO CONTINUE TO ROTATE IN AUTO DOWN OPERATION.

WHEN THE WINDOW HAS COMPLETELY DESCENDED, THE CURRENT FLOW BETWEEN **TERMINAL 3** OF THE POWER WINDOW MASTER SW AND **TERMINAL 6** INCREASES. AS A RESULT, THE SOLENOID STOPS OPERATING, THE DRIVER'S SW TURN OFF AND THE FLOW FROM **TERMINAL 9** OF THE POWER WINDOW MASTER SW TO **TERMINAL 4** IS CUT OFF, STOPPING THE MOTOR SO THAT AUTO STOP OCCURS.

3. STOPPING OF AUTO DOWN AT DRIVER'S WINDOW

WHEN THE POWER WINDOW MASTER SW IS PULLED TO THE UP SIDE DURING AUTO DOWN OPERATION, A GROUND CIRCUIT OPENS IN THE POWER WINDOW MASTER SW AND THE CURRENT DOES NOT FLOW FROM **TERMINAL 3** OF THE POWER WINDOW MASTER SW TO **TERMINAL 6**, SO THE POWER WINDOW MOTOR LH STOPS ROTATING, CAUSING AUTO DOWN OPERATION TO STOP. IF THE MASTER SW IS PULLED CONTINUOUSLY, THE POWER WINDOW MOTOR ROTATES IN THE UP DIRECTION IN MANUAL UP OPERATION.

4. MANUAL OPERATION BY POWER WINDOW CONTROL SW RH

WITH THE POWER WINDOW CONTROL SW RH PULLED TO THE UP SIDE, THE CURRENT THROUGH **TERMINAL 5** OF THE POWER WINDOW CONTROL SW RH FLOWS TO **TERMINAL 1** ➔ **TERMINAL 2** OF THE POWER WINDOW MOTOR RH ➔ **TERMINAL 1** ➔ **TERMINAL 4** OF THE POWER WINDOW CONTROL SW RH ➔ **TERMINAL 3** ➔ **TERMINAL 7** OF THE POWER WINDOW MASTER SW ➔ **TERMINAL 6** ➔ **GROUND**, CAUSING THE POWER WINDOW MOTOR RH ROTATE IN THE UP DIRECTION. UP OPERATION CONTINUES ONLY WHILE THE POWER WINDOW CONTROL SW RH IS PULLED TO THE UP SIDE. WHEN THE WINDOW DESCENDS, THE CURRENT TO THE MOTOR FLOWS IN THE OPPOSITE DIRECTION, FROM **TERMINAL 1 TO TERMINAL 2**, AND THE MOTOR ROTATES IN REVERSE. WHEN THE WINDOW LOCK SW IS PUSHED TO THE LOCK SIDE, THE GROUND CIRCUIT TO THE FRONT PASSENGER'S WINDOW BECOMES OPEN. AS A RESULT, EVEN IF OPEN/CLOSE OPERATION OF THE FRONT PASSENGER'S WINDOW IS TRIED, THE CURRENT FROM **TERMINAL 6** OF THE POWER WINDOW MASTER SW IS NOT GROUNDED AND THE MOTOR DOES NOT ROTATE, SO THE FRONT PASSENGER'S WINDOW CANNOT BE OPERATED AND THE WINDOW LOCKS.

SERVICE HINTS

P 6 POWER WINDOW MASTER SW

9–GROUND : APPROX. 12 VOLTS WITH THE IGNITION SW AT ON POSITION
6–GROUND : APPROX. ALWAYS CONTINUITY
4–GROUND : APPROX. 12 VOLTS WITH THE IGNITION SW ON AND THE POWER WINDOW MASTER SW (DRIVER'S WINDOW) AT DOWN OR AUTO DOWN POSITION
3–GROUND : APPROX. 12 VOLTS WITH THE IGNITION SW ON AND THE POWER WINDOW MASTER SW (DRIVER'S WINDOW) AT UP POSITION

WINDOW LOCK SW

OPEN WITH THE WINDOW LOCK SW AT LOCK POSITION

: PARTS LOCATION

CODE	SEE PAGE	CODE	SEE PAGE	CODE	SEE PAGE
J 2	27	P 5	28(C/P), 29 (CONVERTIBLE)	P 8	28(C/P), 29 (CONVERTIBLE)
J 3	27	P 6	28(C/P), 29 (CONVERTIBLE)		
P 3	27	P 7	28(C/P), 29 (CONVERTIBLE)		

: JUNCTION BLOCK AND WIRE HARNESS CONNECTOR

CODE	SEE PAGE	JUNCTION BLOCK AND WIRE HARNESS (CONNECTOR LOCATION)
1D	20	INSTRUMENT PANEL WIRE AND DRIVER SIDE J/B (LEFT KICK PANEL)

: CONNECTOR JOINING WIRE HARNESS AND WIRE HARNESS

CODE	SEE PAGE	JOINING WIRE HARNESS AND WIRE HARNESS (CONNECTOR LOCATION)
ID1	32	FRONT DOOR LH WIRE AND INSTRUMENT PANEL WIRE (LEFT KICK PANEL)
ID2		
ID3		
IH1	34	FRONT DOOR RH WIRE AND INSTRUMENT PANEL WIRE (RIGHT KICK PANEL)

: GROUND POINTS

CODE	SEE PAGE	GROUND POINTS LOCATION
IE	32	INSTRUMENT PANEL BRACE LH

: SPLICE POINTS

CODE	SEE PAGE	WIRE HARNESS WITH SPLICE POINTS	CODE	SEE PAGE	WIRE HARNESS WITH SPLICE POINTS
I 8	34	INSTRUMENT PANEL WIRE			

J 2 GRAY

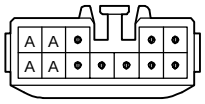

(HINT : SEE PAGE 7)

J 3 BLUE

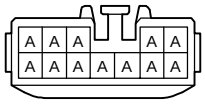

(HINT : SEE PAGE 7)

P 3

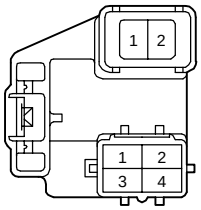

P 5

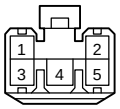

P 6

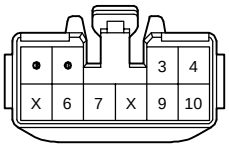

P 7

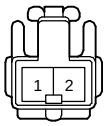

P 8

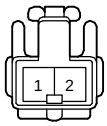

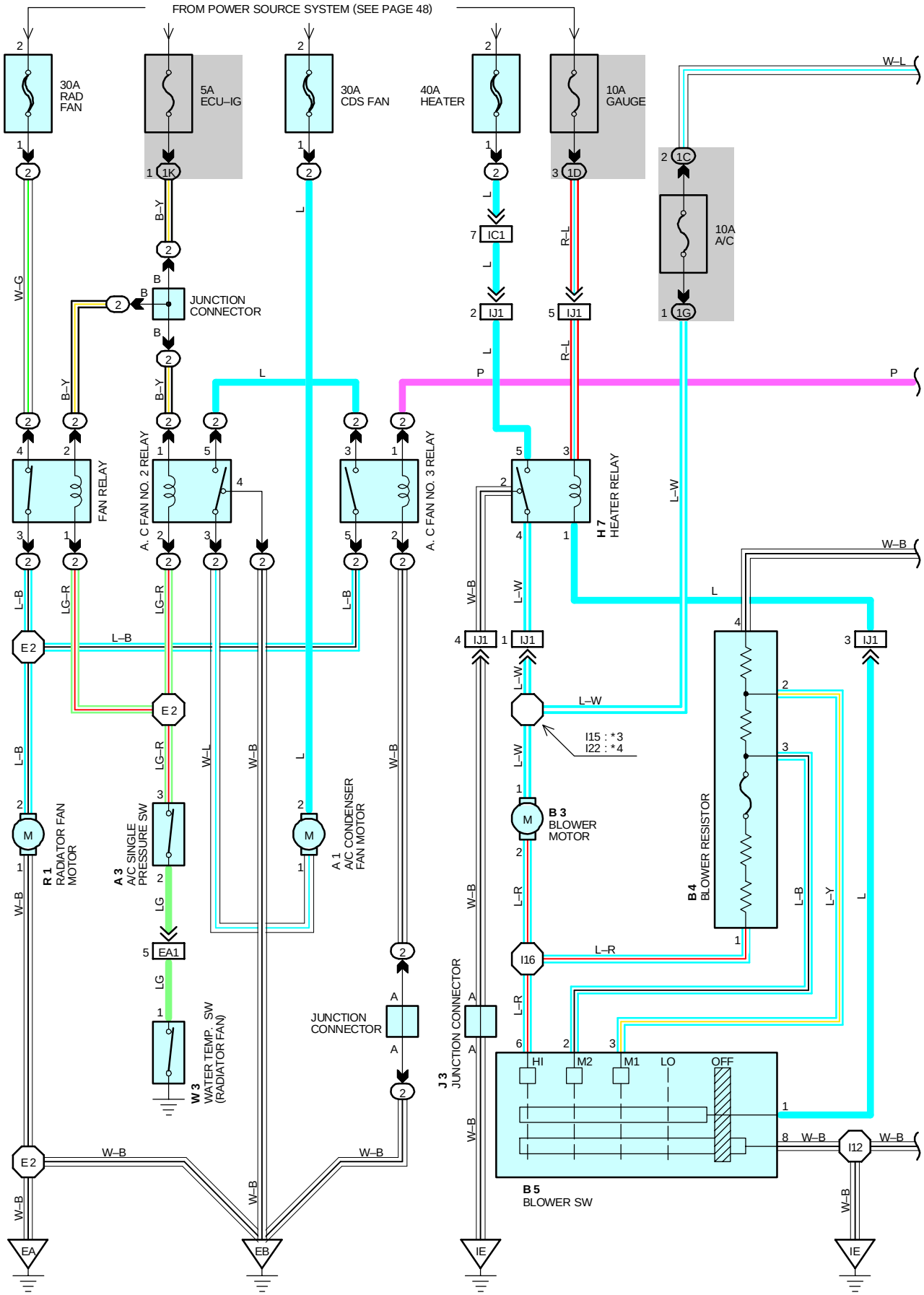
FROM POWER SOURCE SYSTEM (SEE PAGE 48)
30A RAD FAN
5A ECU–IG
30A CDS FAN
40A HEATER
10A GAUGE
10A A/C
JUNCTION CONNECTOR
FAN RELAY
A. C FAN NO. 2 RELAY
A. C FAN NO. 3 RELAY
H 7 HEATER RELAY
R 1 RADIATOR FAN MOTOR
A 3 A/C SINGLE PRESSURE SW
A 1 A/C CONDENSER FAN MOTOR
W 3 WATER TEMP. SW (RADIATOR FAN)
B 3 BLOWER MOTOR
B 4 BLOWER RESISTOR
J 3 JUNCTION CONNECTOR
B 5 BLOWER SW
I15 : *3
I22 : *4
HI
M2
M1
LO
OFF
EA
EB
IE

*1 : PUERTO RICO, CANADA
*2 : USA
*3 : USA, CANADA
*4 : PUERTO RICO

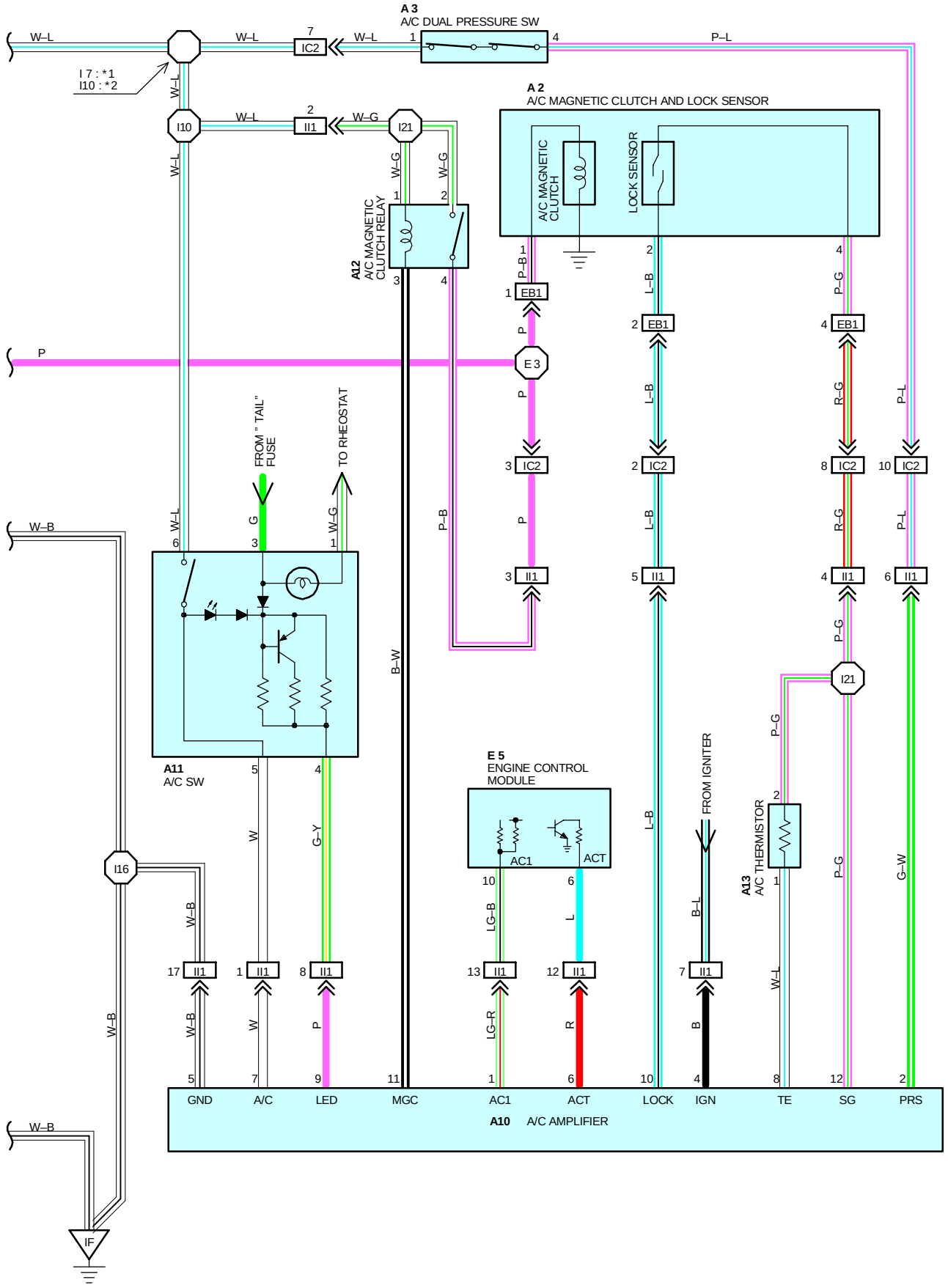

SYSTEM OUTLINE

5. HEATER BLOWER MOTOR OPERATION

CURRENT IS APPLIED AT ALL TIMES THROUGH THE **HEATER** FUSE TO **TERMINAL 5** OF THE HEATER RELAY.
WHEN THE IGNITION SW IS TURNED ON, THE CURRENT FLOWS THROUGH **GAUGE** FUSE TO **TERMINAL 3** OF THE HEATER RELAY → COIL → **TERMINAL 1** → **TERMINAL 1** OF THE BLOWER SW.

* LOW SPEED OPERATION
  WHEN THE BLOWER SW IS MOVED TO **LO** POSITION, THE CURRENT FLOWS TO THE **TERMINAL 1** OF THE BLOWER SW → **TERMINAL 8** → **GROUND,** CAUSING THE HEATER RELAY TO TURN ON. THIS CAUSES THE CURRENT TO FLOW FROM THE **HEATER** FUSE TO **TERMINAL 5** OF THE HEATER RELAY → **TERMINAL 4** → **TERMINAL 1** OF THE BLOWER MOTOR → **TERMINAL 2** → **TERMINAL 1** OF THE BLOWER RESISTOR → **TERMINAL 4** → **GROUND,** CAUSING THE BLOWER MOTOR TO ROTATE AT A LOW SPEED.
* MEDIUM SPEED OPERATION (OPERATION AT M1, M2)
  WHEN THE BLOWER SW IS MOVED TO **M1** POSITION. THE CURRENT FLOWS TO **TERMINAL 1** OF THE BLOWER SW → **TERMINAL 8** → **GROUND,** CAUSING THE HEATER RELAY TO TURN ON. THIS CAUSES THE CURRENT FLOW FROM THE **HEATER** FUSE TO **TERMINAL 5** OF THE HEATER RELAY → **TERMINAL 4** → **TERMINAL 1** OF THE BLOWER MOTOR → **TERMINAL 2** → **TERMINAL 1** OF THE BLOWER RESISTOR → **TERMINAL 2** → **TERMINAL 3** OF THE BLOWER SW → **TERMINAL 8** → **GROUND**. AT THIS TIME, THE BLOWER RESISTANCE OF THE BLOWER RESISTOR IS LESS THAN AT LOW SPEED, SO THE BLOWER MOTOR ROTATES AT MEDIUM LOW SPEED.
  WHEN THE BLOWER SW IS MOVED TO **M2** POSITION, THE CURRENT THROUGH THE MOTOR FLOWS FROM **TERMINAL 1** OF THE BLOWER RESISTOR → **TERMINAL 3** → **TERMINAL 2** OF THE BLOWER SW → **TERMINAL 8** → **GROUND**. AT THIS TIME, RESISTANCE OF THE BLOWER RESISTOR IS LESS THAN AT **M1** POSITION, SO THE BLOWER RESISTOR IS LESS THAN AT **M1** POSITION, SO THE BLOWER MOTOR ROTATES AT MEDIUM HIGH SPEED.
* HIGH SPEED OPERATION
  WHEN THE BLOWER SW IS MOVED TO **HI** POSITION, THE CURRENT FLOWS TO **TERMINAL 1** OF THE BLOWER SW → **TERMINAL 8** → **GROUND**, CAUSING THE HEATER RELAY TO TURN ON.
  THIS CAUSES THE CURRENT TO FLOW FROM THE **HEATER** FUSE TO **TERMINAL 5** OF THE HEATER RELAY → **TERMINAL 4** → **TERMINAL 1** OF THE BLOWER MOTOR → **TERMINAL 2** → **TERMINAL 6** OF THE BLOWER SW → **TERMINAL 8** → **GROUND**, CAUSING THE BLOWER MOTOR TO ROTATE AT HIGH SPEED.

6. RADIATOR FAN AND CONDENSER FAN OPERATION

WHEN THE IGNITION SW IS TURNED ON, THE CURRENT FLOWS FROM THE **ECU–IG** FUSE TO **TERMINAL 2** OF THE FAN RELAY → **TERMINAL 1** → **TERMINAL 3** OF THE A/C SINGLE PRESSURE SW → **TERMINAL 2** → **TERMINAL 1** OF THE WATER TEMP. SW (RADIATOR FAN) → **GROUND,** ACTIVATING THE FAN RELAY. AT THIS TIME, THE CURRENT IS APPLIED FROM **RAD FAN** FUSE TO **TERMINAL 4** OF THE FAN RELAY. AT THE SAME TIME, THE CURRENT FROM THE **ECU–IG** FUSE THROUGH **TERMINAL 1** OF THE A.C. FAN NO. 2 RELAY → COIL → **TERMINAL 2** → A/C SINGLE PRESSURE SW → WATER TEMP. SW (RADIATOR FAN) → **GROUND,** THEN THROUGH THE **CDS FAN** FUSE TO **TERMINAL 2** OF THE A/C CONDENSER FAN MOTOR → **TERMINAL 1** → **TERMINAL 3** OF THE A/C FAN NO. 2 RELAY → **TERMINAL 5** → **TERMINAL 3** OF THE A/C FAN NO. 3 RELAY.

* LOW SPEED OPERATION
  WHEN THE MAGNETIC CLUTCH IS TURNED ON DURING A/C OPERATION, THE CURRENT FROM THE **A/C** FUSE FLOWS THROUGH **TERMINAL 2** OF THE A/C MAGNETIC CLUTCH RELAY TO **TERMINAL 4** → **TERMINAL 1** OF THE A/C FAN NO. 3 RELAY → **TERMINAL 2** → **GROUND,** ACTIVATING THE A.C. FAN NO. 3 RELAY. THEN THE CURRENT APPLIED TO **TERMINAL 3** OF THE A.C. FAN NO. 3 RELAY FLOWS THROUGH **TERMINAL 5** TO **TERMINAL 2** OF THE RADIATOR FAN MOTOR → **TERMINAL 1** → **GROUND**. SINCE THE CONDENSOR AND RADIATOR FAN MOTORS ARE CONNECTED IN SERIES, BOTH FANS ROTATE AT LOW SPEED.
* HIGH SPEED OPERATION
  DURING A/C OPERATION WHEN THE WATER TEMP. REACHES APPROX. **90**°C (**194**°F) OR MORE (WATER TEMP. SW (RADIATOR FAN) IS OFF) OR THE REFRIGERANT PRESSURE REACHES **1520** KPA (**15.5** KGF/CM2, **220** PSI) OR MORE (A/C SINGLE PRESSURE SW IS OFF), CURRENT TO THE FAN RELAY AND A/C FAN NO. 2 RELAY IS OFF AND THAT THE MOTORS ARE SUPPLIED IN PARALLEL, CAUSING THE MOTOR TO ROTATE AT HIGH SPEED.

SYSTEM OUTLINE

7. AIR CONDITIONING OPERATION

WHEN THE BLOWER SW IS SET ON, THE CURRENT FROM THE **A/C** FUSE FLOWS TO **TERMINAL 1** OF THE A/C DUAL PRESSURE SW → **TERMINAL 4** → **TERMINAL 2** OF THE A/C AMPLIFIER. THE ENGINE RPM SIGNAL FROM THE IGNITER, THE EVAPORATOR TEMP. SIGNAL FROM THE A/C THERMISTOR AND THE LOCK SIGNAL FROM THE LOCK SENSOR ARE ALL SUPPLIED TO THE A/C AMPLIFIER.

WHEN THE A/C SW IS TURNED ON, THE A/C SW ON SIGNAL IS SENT TO THE A/C AMPLIFIER. WHEN THE A/C SW IS TURNED ON, THE A/C SW ON SIGNAL IS SENT TO THE A/C AMPLIFIER. THE CURRENT FLOWS FROM THE **A/C** FUSE TO **TERMINAL 1** OF THE A/C MAGNETIC CLUTCH RELAY → COIL → **TERMINAL 3** → **TERMINAL 11** OF THE A/C AMPLIFIER → **TERMINAL 5** → GROUND, TURNING THE A/C MAGNETIC CLUTCH RELAY ON.

THIS CAUSES THE CURRENT FROM THE **A/C** FUSE TO FLOW TO THE A/C MAGNETIC CLUTCH, TURNING THE A/C MAGNETIC CLUTCH ON. WHEN ANY OF THE FOLLOWING SIGNALS ARE INPUT TO THE A/C AMPLIFIER, THE AMPLIFIER OPERATES TO TURN OFF THE AIR CONDITIONING.

* ENGINE LOW RPM SIGNAL.
* A SIGNAL THAT THE TEMPERATURE AT EVAPORATOR IS LOW.
* A SIGNAL THAT THE REFRIGERANT PRESSURE IS ABNORMALLY HIGH OR LOW.
* A SIGNAL THAT THE A/C COMPRESSOR IS LOCKED.

SERVICE HINTS

FAN RELAY

(2) 4–(2)3 : OPEN WITH THE IGNITION SW ON, THE A/C SINGLE PRESSURE SW ON AND THE WATER TEMP. SW (RADIATOR FAN)

A/C FAN NO. 2 RELAY

(2) 3 – (2) 4 : CLOSED WITH THE IGNITION SW OFF, THE A/C SINGLE PRESSURE SW OFF OR THE WATER TEMP. SW (RADIATOR FAN)

(2) 3 – (2) 4 : CLOSED WITH THE IGNITION SW ON, THE A/C SINGLE PRESSURE SW ON AND THE WATER TEMP. SW (RADIATOR FAN)

A/C FAN NO. 3 RELAY

(2) 5 – (2) 3 : CLOSED WITH THE IGNITION SW ON AND A/C MAGNETIC CLUTCH RELAY ON

H7 HEATER RELAY

4–5: CLOSED WITH THE IGNITION SW ON AND THE BLOWER SW ON.

A13 A/C THERMISTOR

1–2: APPROX. **1500** Ω AT **25**°C (**77**°F)

A 3 A/C DUAL PRESSURE SW

1–4: OPEN WITH THE REFRIGERANT PRESSURE AT LESS THAN APPROX. **196.1** KPA (**2.0** KGF/CM^2, **28.4** PSI) OR MORE THAN APPROX. **3138.1** KPA (**32.0** KGF/CM^2, **458** PSI)

A 3 A/C SINGLE PRESSURE SW

2–3: OPEN WITH THE REFRIGERANT PRESSURE MORE THAN **1520** KPA (**15.5** KGF/CM^2, **220** PSI)

W 3 WATER TEMP. SW (RADIATOR FAN)

1–GROUND:OPEN ABOVE APPROX. **90**°C (**194**°F)
CLOSED BELOW APPROX. **83**°C (**181**°F)

: PARTS LOCATION

CODE	SEE PAGE	CODE	SEE PAGE	CODE	SEE PAGE
A 1	24	**A12**	26	**E 5**	26
A 2	24	**A13**	26	**H 7**	26
A 3	24	**B 3**	26	**J 3**	27
A10	26	**B 4**	26	**R 1**	25
A11	26	**B 5**	26	**W 3**	25

: RELAY BLOCKS

CODE	SEE PAGE	RELAY BLOCKS (RELAY BLOCK LOCATION)
2	22	ENGINE ROOM R/B (ENGINE COMPARTMENT LEFT)

: JUNCTION BLOCK AND WIRE HARNESS CONNECTOR

CODE	SEE PAGE	JUNCTION BLOCK AND WIRE HARNESS (CONNECTOR LOCATION)
1C	20	INSTRUMENT PANEL WIRE AND DRIVER SIDE J/B (LEFT KICK PANEL)
1D		
1G		
1K	20	ENGINE ROOM MAIN WIRE AND DRIVER SIDE J/B (LEFT KICK PANEL)

: CONNECTOR JOINING WIRE HARNESS AND WIRE HARNESS

CODE	SEE PAGE	JOINING WIRE HARNESS AND WIRE HARNESS (CONNECTOR LOCATION)
EA1	30	ENGINE WIRE AND ENGINE ROOM MAIN WIRE (INSIDE OF THE ENGINE ROOM R/B)
EB1	30	A/C NO. 1 WIRE AND ENGINE ROOM MAIN WIRE (NEAR THE RADIATOR SUPPORT RH)
IC1	32	INSTRUMENT PANEL WIRE AND ENGINE ROOM MAIN WIRE (LEFT KICK PANEL)
IC2		
II1	34	INSTRUMENT PANEL WIRE AND A/C SUB WIRE (NEAR THE BLOWER UNIT)
IJ1	34	INSTRUMENT PANEL NO. 2 WIRE AND INSTRUMENT PANEL WIRE (RIGHT KICK PANEL)

: GROUND POINTS

CODE	SEE PAGE	GROUND POINTS LOCATION
EA	30	FRONT SIDE OF THE RIGHT FENDER
EB	30	FRONT SIDE OF THE LEFT FENDER
IE	32	INSTRUMENT PANEL BRACE LH
IF	32	RIGHT KICK PANEL

: SPLICE POINTS

CODE	SEE PAGE	WIRE HARNESS WITH SPLICE POINTS	CODE	SEE PAGE	WIRE HARNESS WITH SPLICE POINTS
E2	30	ENGINE ROOM MAIN WIRE	I15	34	INSTRUMENT PANEL WIRE
E3			I16		
I7	34	INSTRUMENT PANEL WIRE	I21	34	A/C SUB WIRE
I10			I22	34	INSTRUMENT PANEL WIRE
I12					

A 1 BLACK



A 2 GRAY



A 3 BLACK

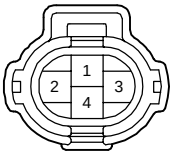

A10 BLACK

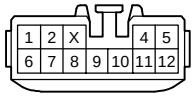

A11 BLACK

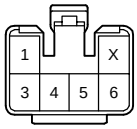

A12

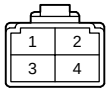

A13



B 3

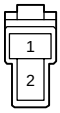

B 4

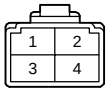

B 5

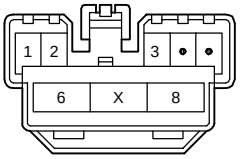

(USA, CANADA) **E 5**

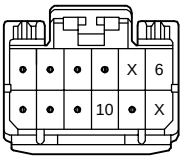

(PUERTO RICO) **E 5**

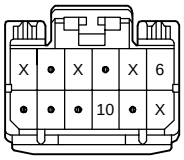

H 7

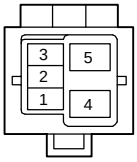

J 3 BLUE

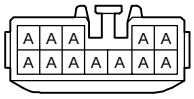

(HINT : SEE PAGE 7)

R 1 GRAY

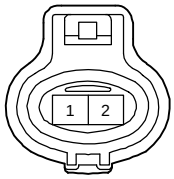

W 3



*1 : W/ REAR SPEAKER

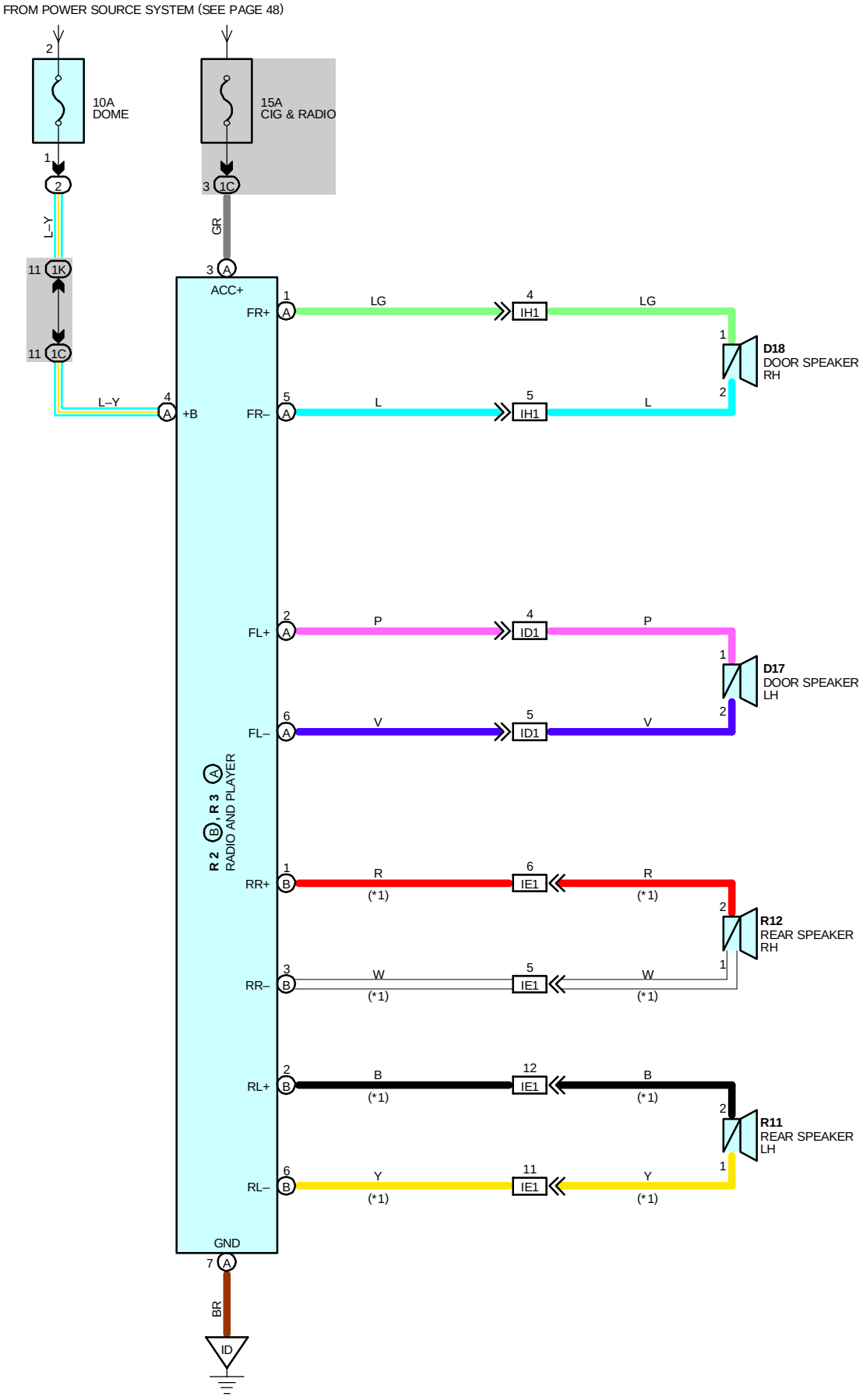

SERVICE HINTS

R 3(A) RADIO AND PLAYER

(A) 4–GROUND : ALWAYS APPROX. **12** VOLTS
(A) 3–GROUND : APPROX. **12** VOLTS WITH THE IGNITION SW AT **ACC** OR **ON** POSITION
(A) 7–GROUND : ALWAYS CONTINUITY

: PARTS LOCATION

CODE	SEE PAGE	CODE		SEE PAGE	CODE	SEE PAGE
D17	28 (C/P), 29 (CONVERTIBLE)	**R 2**	B	27	**R11**	28 (C/P), 29 (CONVERTIBLE)
D18	28 (C/P), 29 (CONVERTIBLE)	**R 3**	A	27	**R12**	28 (C/P), 29 (CONVERTIBLE)

: RELAY BLOCKS

CODE	SEE PAGE	RELAY BLOCKS (RELAY BLOCK LOCATION)
2	22	ENGINE ROOM R/B (ENGINE COMPARTMENT LEFT)

: JUNCTION BLOCK AND WIRE HARNESS CONNECTOR

CODE	SEE PAGE	JUNCTION BLOCK AND WIRE HARNESS (CONNECTOR LOCATION)
1C	20	INSTRUMENT PANEL WIRE AND DRIVER SIDE J/B (LEFT KICK PANEL)
1K	20	ENGINE ROOM MAIN WIRE AND DRIVER SIDE J/B (LEFT KICK PANEL)

: CONNECTOR JOINING WIRE HARNESS AND WIRE HARNESS

CODE	SEE PAGE	JOINING WIRE HARNESS AND WIRE HARNESS (CONNECTOR LOCATION)
ID1	32	FRONT DOOR LH WIRE AND INSTRUMENT PANEL WIRE (LEFT KICK PANEL)
IE1	32	INSTRUMENT PANEL WIRE AND FLOOR WIRE (LEFT KICK PANEL)
IH1	34	FRONT DOOR RH WIRE AND INSTRUMENT PANEL WIRE (RIGHT KICK PANEL)

: GROUND POINTS

CODE	SEE PAGE	GROUND POINTS LOCATION
ID	32	LEFT KICK PANEL

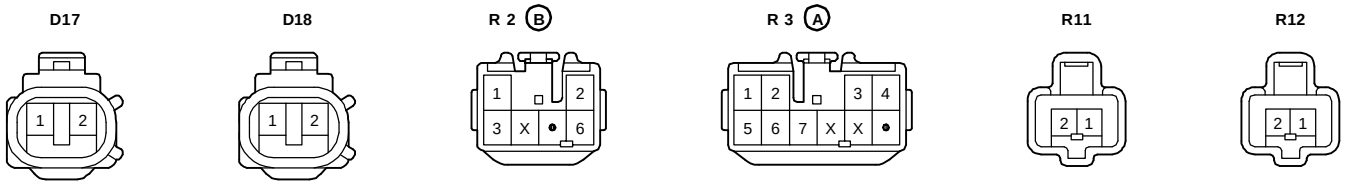

*1 : W/ TIMER
*2 : W/O TIMER

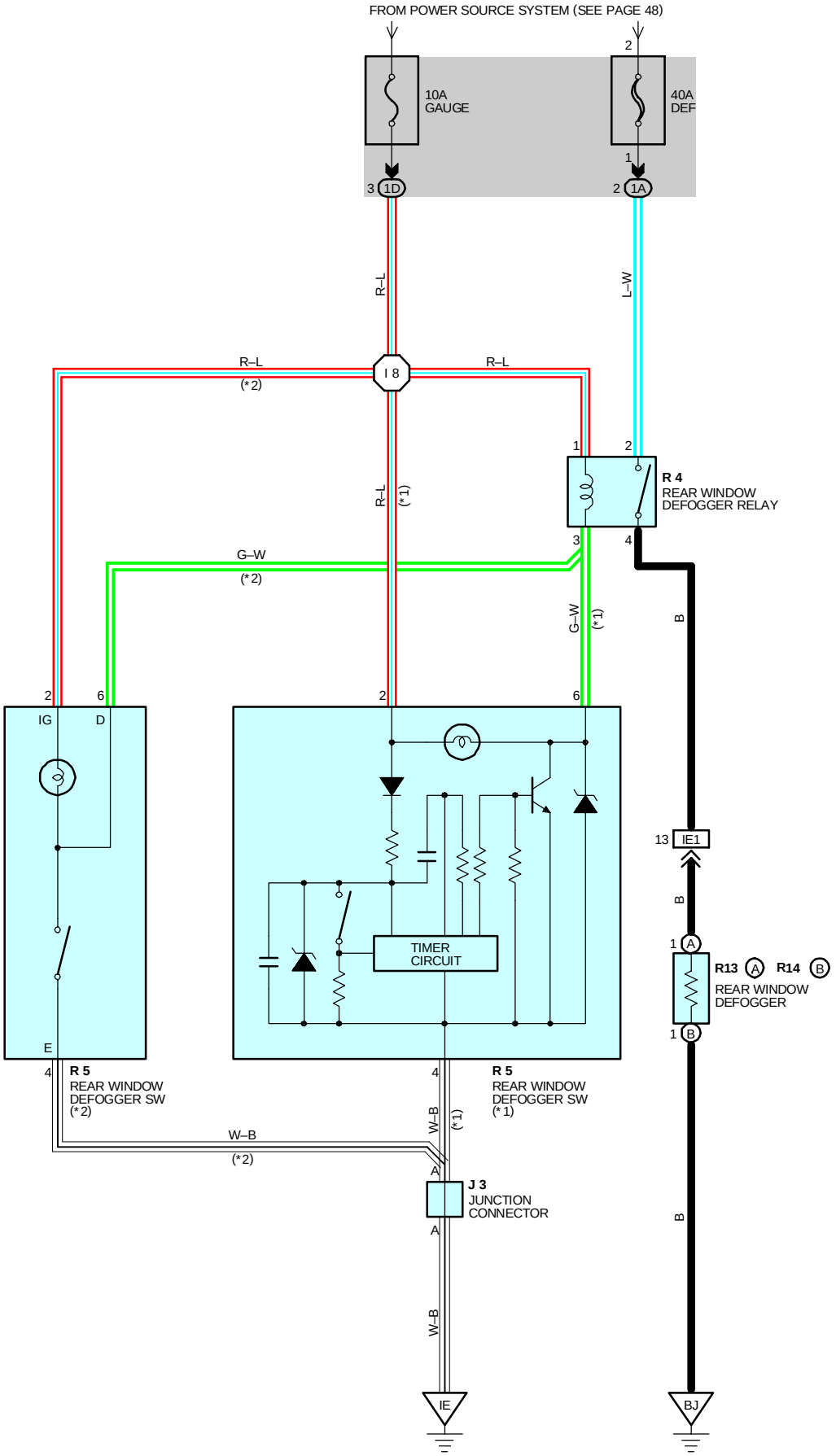

SERVICE HINTS

R 4 REAR WINDOW DEFOGGER RELAY

2–4 : CLOSED WITH THE IGNITION SW ON AND THE REAR WINDOW DEFOGGER SW ON

R 5 REAR WINDOW DEFOGGER SW (W/ TIMER)

2–GROUND : APPROX. **12** VOLTS WITH THE IGNITION SW ON
4–GROUND : ALWAYS CONTINUITY
6–GROUND : CONTINUITY WITH THE DEFOGGER SW ON AND APPROX. **15** MINUTES THEREAFTER

R 5 REAR WINDOW DEFOGGER SW (W/O TIMER)

4–6 : CLOSED WITH THE REAR WINDOW DEFOGGER SW ON

: PARTS LOCATION

CODE	SEE PAGE	CODE		SEE PAGE	CODE		SEE PAGE
J 3	27	**R 5**		27	**R14**	B	28 (C,P), 29 (CONVERTIBLE)
R 4	27	**R13**	A	28 (C/P), 29 (CONVERTIBLE)			

: JUNCTION BLOCK AND WIRE HARNESS CONNECTOR

CODE	SEE PAGE	JUNCTION BLOCK AND WIRE HARNESS (CONNECTOR LOCATION)
1 A	20	INSTRUMENT PANEL WIRE AND DRIVER SIDE J/B (LEFT KICK PANEL)
1 D		

: CONNECTOR JOINING WIRE HARNESS AND WIRE HARNESS

CODE	SEE PAGE	JOINING WIRE HARNESS AND WIRE HARNESS (CONNECTOR LOCATION)
IE1	32	INSTRUMENT PANEL WIRE AND FLOOR WIRE (LEFT KICK PANEL)

: GROUND POINTS

CODE	SEE PAGE	GROUND POINTS LOCATION
IE	32	INSTRUMENT PANEL BRACE LH
BJ	36 (C/P)	RIGHT SIDE OF THE UPPER BACK PANEL
	37 (CONVERTIBLE)	

: SPLICE POINTS

CODE	SEE PAGE	WIRE HARNESS WITH SPLICE POINTS	CODE	SEE PAGE	WIRE HARNESS WITH SPLICE POINTS
I 8	34	INSTRUMENT PANEL WIRE			

J 3 BLUE

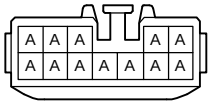

(HINT : SEE PAGE 7)

R 4

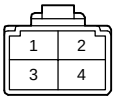

R 5 BLACK

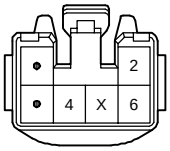

(C/P) **R13** (A) BLACK



(CONVERTIBLE) **R13** (A)



R14 (B) BLACK



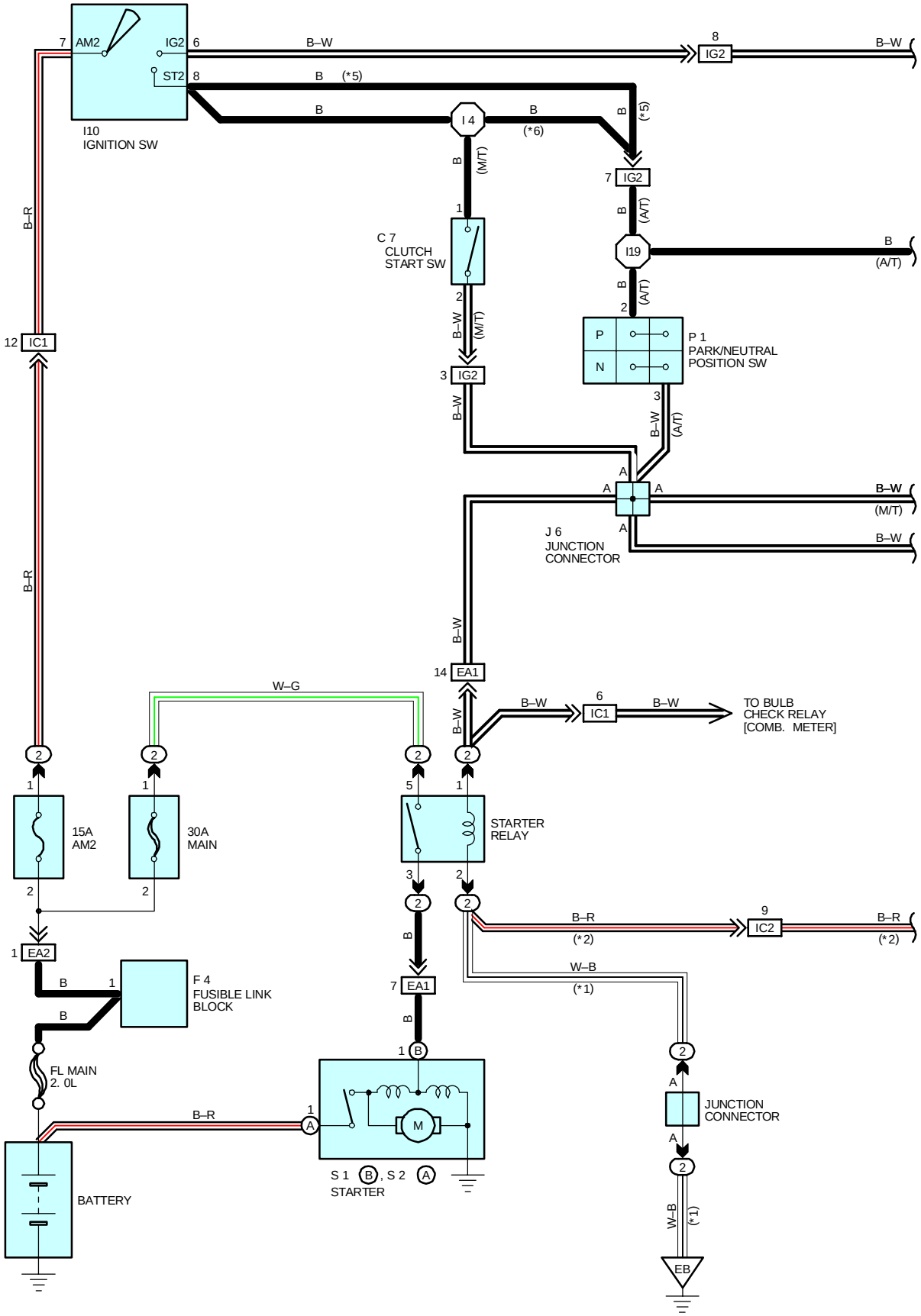
I10
IGNITION SW
7 AM2
IG2 6
ST2 8
B–W
B (*5)
B
I 4
B (*6)
B (*5)
8 IG2
B–W
7 IG2
B (A/T)
I19
B (A/T)
B (A/T)
2
P
N
P 1
PARK/NEUTRAL
POSITION SW
3
B–W (A/T)
B (M/T)
1
C 7
CLUTCH
START SW
2
B–W (M/T)
3 IG2
B–W
12 IC1
B–R
B–R
A
A
A
B–W (M/T)
B–W
J 6
JUNCTION
CONNECTOR
B–W
14 EA1
W–G
B–W
6 IC1
B–W
TO BULB
CHECK RELAY
[COMB. METER]
2
1
15A
AM2
30A
MAIN
5
STARTER
RELAY
3
2
B–R (*2)
9 IC2
B–R (*2)
W–B (*1)
1 EA2
B
1
F 4
FUSIBLE LINK
BLOCK
B
7 EA1
B
FL MAIN
2. 0L
1 B
B–R
1 A
M
S 1 B , S 2 A
STARTER
BATTERY
A
JUNCTION
CONNECTOR
A
2
W–B (*1)
EB

*1 : W/O THEFT DETERRENT SYSTEM
*2 : W/ THEFT DETERRENT SYSTEM
*3 : W/ DOOR LOCK CONTROL
*4 : W/O DOOR LOCK CONTROL
*5 : A/T W/ POWER WINDOW
*6 : A/T W/O POWER WINDOW

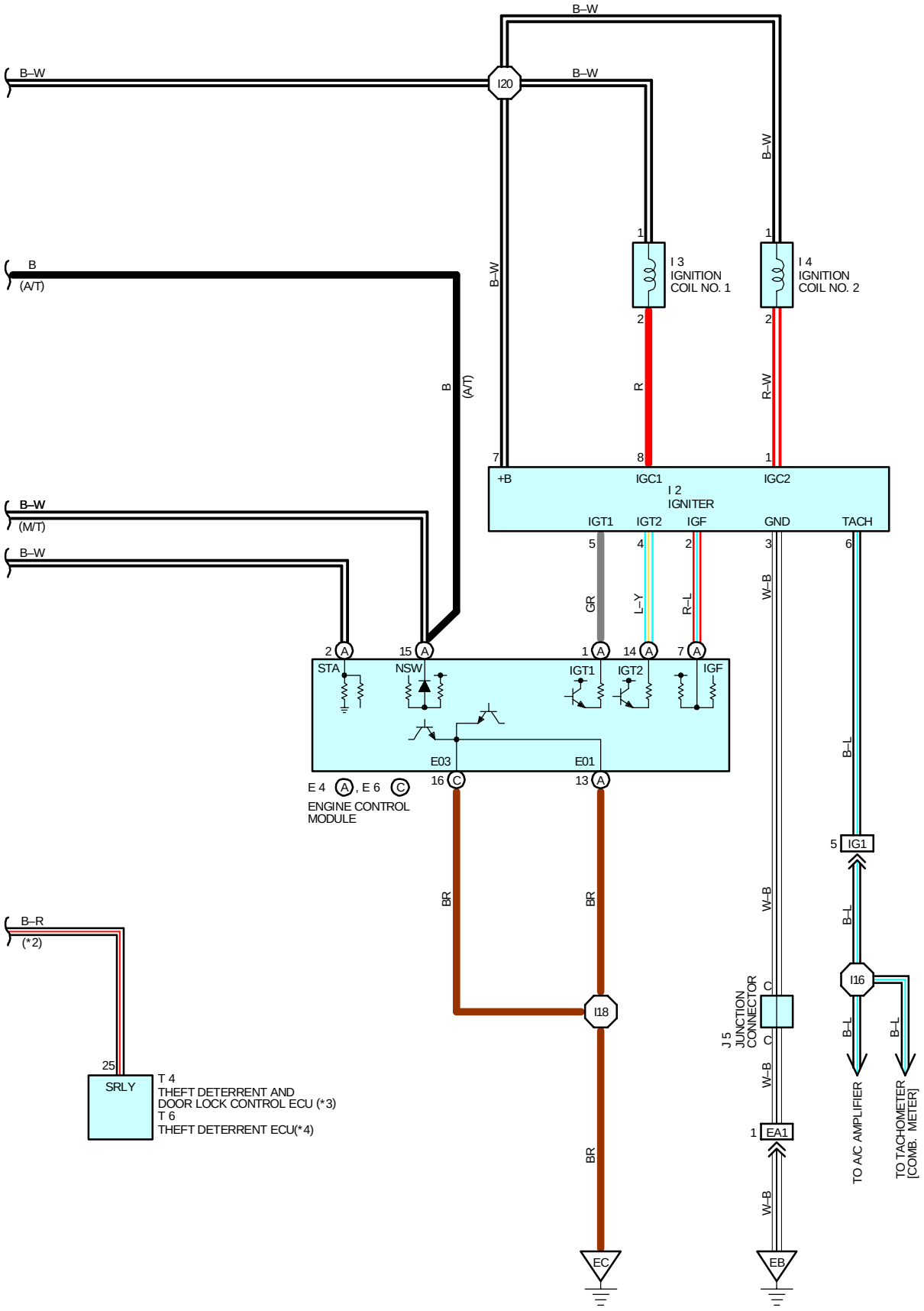

SERVICE HINTS

S1 (B), S2 (A) STARTER

POINTS CLOSED WITH THE PARK/NEUTRAL POSITION SW AT **P** OR **N** POSITION AND THE IGNITION SW AT **ST** POSITION (A/T)
POINTS CLOSED WITH THE CLUTCH START SW **ON** AND THE IGNITION SW AT **ST** POSITION (M/T)

C7 CLUTCH START SW

1–2 : CLOSED WITH THE CLUTCH PEDAL FULLY DEPRESSED

I10 IGNITION SW

7–8 : CLOSED WITH THE IGNITION SW AT **ST** POSITION
7–6 : CLOSED WITH THE IGNITION SW AT **ON** OR **ST** POSITION

P1 PARK/NEUTRAL POSITION SW

2–3 : CLOSED WITH THE SHIFT LEER IN **P** OR **N** POSITION

STARTER RELAY

②5–②3 : CLOSED WITH THE PARK/NEUTRAL POSITION SW AT **P** OR **N** POSITION AND THE IGNITION SW AT **ST** POSITION (A/T)
②5–②3 : CLOSED WITH THE CLUTCH START SW **ON** AND THE IGNITION SW AT **ST** POSITION (M/T)

○ : PARTS LOCATION

CODE	SEE PAGE	CODE	SEE PAGE	CODE	SEE PAGE
C7	26	I3	25	P1	25
E4 A	26	I4	25	S1 B	25
E6 C	26	I10	27	S2 A	25
F4	24	J5	27	T4	27
I2	25	J6	27	T6	27

⬭ : RELAY BLOCKS

CODE	SEE PAGE	RELAY BLOCKS (RELAY BLOCK LOCATION)
2	22	ENGINE ROOM R/B (ENGINE COMPARTMENT LEFT)

▭ : CONNECTOR JOINING WIRE HARNESS AND WIRE HARNESS

CODE	SEE PAGE	JOINING WIRE HARNESS AND WIRE HARNESS (CONNECTOR LOCATION)
EA1	30	ENGINE WIRE AND ENGINE ROOM MAIN WIRE (INSIDE OF THE ENGINE ROOM R/B)
EA2		
IC1	32	INSTRUMENT PANEL WIRE AND ENGINE ROOM MAIN WIRE (LEFT KICK PANEL)
IC2	34	
IG1	34	ENGINE WIRE AND INSTRUMENT PANEL WIRE (NEAR THE BLOWER UNIT)
IG2	34	

▽ : GROUND POINTS

CODE	SEE PAGE	GROUND POINTS LOCATION
EB	30	FRONT SIDE OF THE LEFT FENDER
EC	30	RIGHT SIDE OF THE SURGE TANK

⯃ : SPLICE POINTS

CODE	SEE PAGE	WIRE HARNESS WITH SPLICE POINTS	CODE	SEE PAGE	WIRE HARNESS WITH SPLICE POINTS
I4	34	INSTRUMENT PANEL WIRE	I19	34	ENGINE WIRE
I16			120		
I18	34	ENGINE WIRE			

C 7



(M/T) E 4 Ⓐ

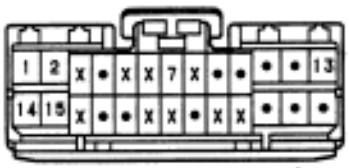

(A/T) E 4 Ⓐ

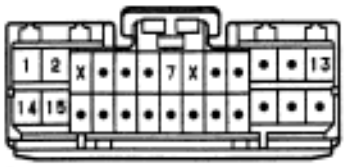

(M/T) E 6 Ⓒ

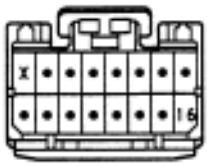

(A/T) E 6 Ⓒ

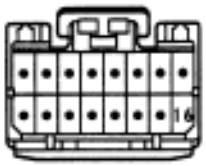

F 4



I 2 BLACK

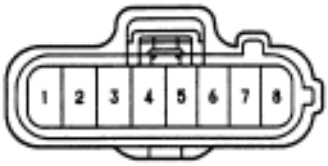

I 3, I 4 BLACK



I10

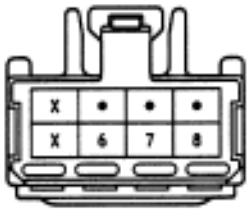

J 5 GRAY



(HINT: SEE PAGE 7)

J 6 GRAY



(HINT: SEE PAGE 7)

P 1 GRAY

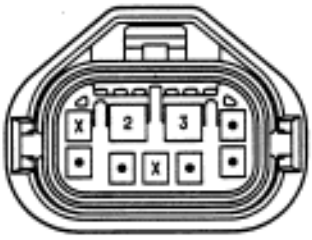

S 1 Ⓑ BLACK



S 2 Ⓐ

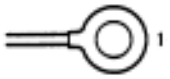

T 4 ORANGE

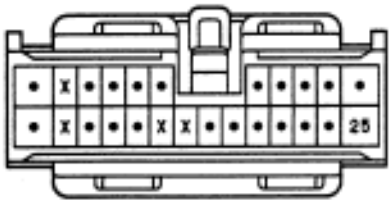

T 6 ORANGE

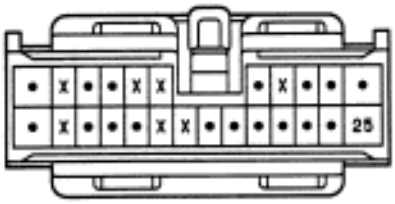

*1 : PACKAGE TRAY TYPE
*2 : REAR SPOILER TYPE
*3 : C/P
*4 : CONVERTIBLE

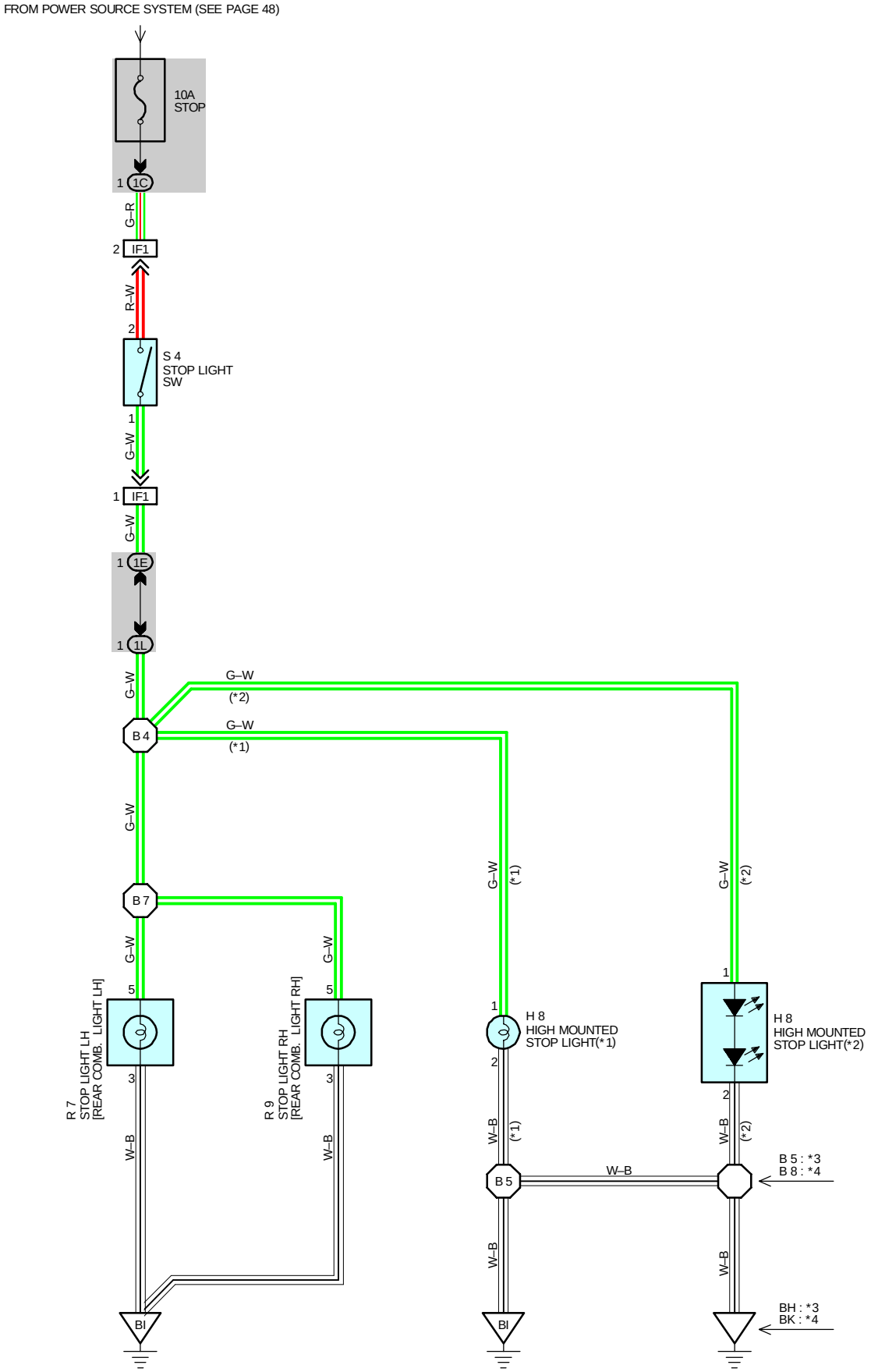

SERVICE HINTS

S 4 STOP LIGHT SW
2–1 : CLOSED WITH THE BRAKE PEDAL DEPRESSED

: PARTS LOCATION

CODE	SEE PAGE	CODE	SEE PAGE	CODE	SEE PAGE
H 8	28(C/P), 29(CONVERTIBLE)	R 9	28(C/P), 29(CONVERTIBLE)		
R 7	28(C/P), 29(CONVERTIBLE)	S 4	27		

: JUNCTION BLOCK AND WIRE HARNESS CONNECTOR

CODE	SEE PAGE	JUNCTION BLOCK AND WIRE HARNESS (CONNECTOR LOCATION)
1C	20	INSTRUMENT PANEL WIRE AND DRIVER SIDE J/B (LEFT KICK PANEL)
1E		
1L	20	FLOOR WIRE AND DRIVER SIDE J/B (LEFT KICK PANEL)

: CONNECTOR JOINING WIRE HARNESS AND WIRE HARNESS

CODE	SEE PAGE	JOINING WIRE HARNESS AND WIRE HARNESS (CONNECTOR LOCATION)
IF1	34	INSTRUMENT PANEL WIRE AND SWITCH WIRE (NEAR THE STEERING COLUMN)

: GROUND POINTS

CODE	SEE PAGE	GROUND POINTS LOCATION
BH	36(C/P)	LEFT SIDE OF THE UPPER BACK PANEL
BI	36(C/P)	LOWER BACK PANEL CENTER
	37(CONVERTIBEL)	
BK	37(CONVERTIBEL)	UPPER THE REAR WHEEL HOUSE LH

: SPLICE POINTS

CODE	SEE PAGE	WIRE HARNESS WITH SPLICE POINTS	CODE	SEE PAGE	WIRE HARNESS WITH SPLICE POINTS
B 4	36(C/P)	FLOOR WIRE	B 7	37(CONVERTIBEL)	FLOOR WIRE
B 5			B 8	36	
B 7				37(CONVERTIBEL)	

(PACKAGE TRAY TYPE) H 8 GRAY

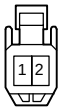

(REAR SPOILER TYPE) H 8

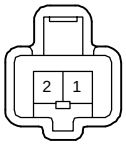

R 7

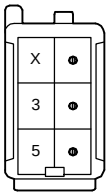

R 9

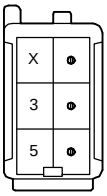

(W/ CRUISE CONTROL) S 4

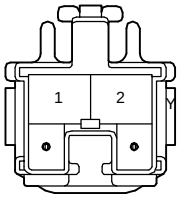

(W/O CRUISE CONTROL) S 4

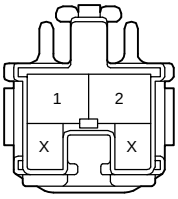

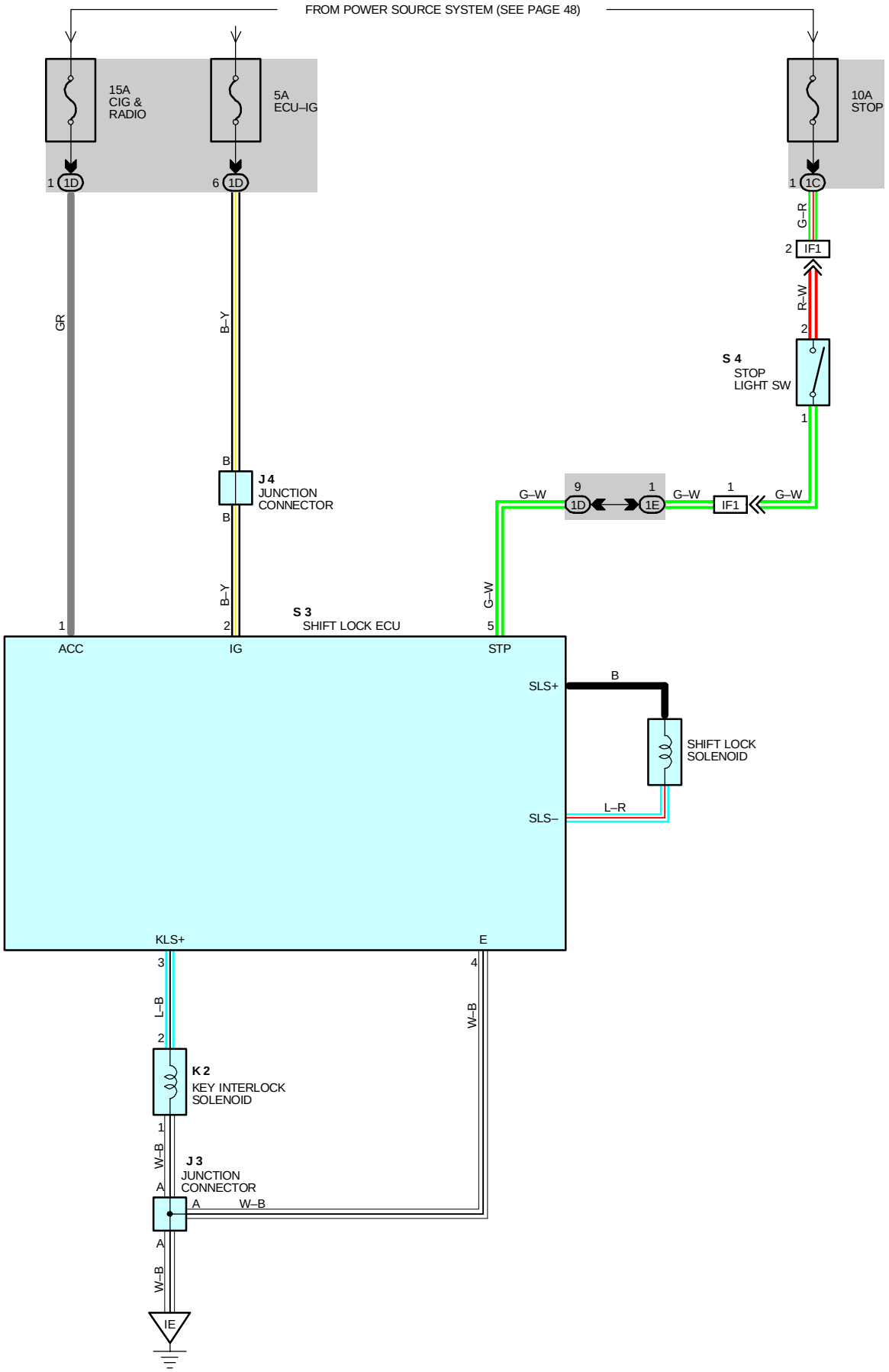
FROM POWER SOURCE SYSTEM (SEE PAGE 48)
15A
CIG &
RADIO
5A
ECU–IG
10A
STOP
1 1D
6 1D
1 1C
G–R
2 IF1
R–W
2
S 4
STOP
LIGHT SW
1
GR
B–Y
B
J 4
JUNCTION
CONNECTOR
B
B–Y
G–W
9 1D
1 1E
G–W
1 IF1
G–W
S 3
SHIFT LOCK ECU
1
ACC
2
IG
5
STP
SLS+
B
SHIFT LOCK
SOLENOID
SLS–
L–R
KLS+
E
3
4
L–B
W–B
2
K 2
KEY INTERLOCK
SOLENOID
1
W–B
J 3
JUNCTION
CONNECTOR
A
A
W–B
A
W–B
IE

SYSTEM OUTLINE

WHEN THE IGNITION SW IS TURNED TO **ACC** POSITION, THE CURRENT FROM THE **CIG & RADIO** FUSE FLOWS TO **TERMINAL 1** OF THE SHIFT LOCK ECU. IN THE **ON** POSITION, THE CURRENT FROM THE **ECU–IG** FUSE FLOWS TO **TERMINAL 2** OF THE SHIFT LOCK ECU.

1. SHIFT LOCK MECHANISM

WITH THE IGNITION SW ON, WHEN A SIGNAL THAT THE BRAKE PEDAL IS DEPRESSED (STOP LIGHT SW ON) AND A SIGNAL THAT THE SHIFT LEVER IS PUT IN "P" POSITION ARE INPUT TO THE SHIFT LOCK ECU, THE SHIFT LOCK ECU OPERATES AND THE CURRENT FLOWS FROM **TERMINAL 2** OF THE SHIFT LOCK ECU TO THE SHIFT LOCK SOLENOID → SOLENOID → **TERMINAL 4** OF THE SHIFT LOCK ECU → **GROUND**. THIS CAUSES THE SHIFT LOCK SOLENOID TO TURN ON (PLATE STOPPER DISENGAGES) AND THE SHIFT LEVER CAN SHIFT INTO OTHER POSITION THAN THE "P" POSITION.

2. KEY INTERLOCK MECHANISM

WITH THE IGNITION SW IN **ON** OR **ACC** POSITION, WHEN THE SHIFT LEVER IS PUT IN "P" POSITION, THE CURRENT FROM **TERMINAL 3** OF THE SHIFT LOCK ECU TO KEY INTERLOCK SOLENOID IS CUT OFF. THIS CAUSES THE KEY INTERLOCK SOLENOID TO TURN OFF (LOCK LEVER DISENGAGES FROM LOCK POSITION) AND THE IGNITION KEY CAN BE TURNED FROM **ACC** TO **LOCK** POSITION.

SERVICE HINTS

S3 SHIFT LOCK ECU

1–GROUND:APPROX. **12** VOLTS WITH THE IGNITION SW AT **ACC** OR **ON** POSITION
2–GROUND:APPROX. **12** VOLTS WITH THE IGNITION SW AT **ON** POSITION
4–GROUND:ALWAYS CONTINUITY
5–GROUND:APPROX. **12** VOLTS WITH THE BRAKE PEDAL DEPRESSED (STOP LIGHT SW ON)

○ : PARTS LOCATION

CODE	SEE PAGE	CODE	SEE PAGE	CODE	SEE PAGE
J3	27	K2	27	S4	27
J4	27	S3	27		

⬭ : JUNCTION BLOCK AND WIRE HARNESS CONNECTOR

CODE	SEE PAGE	JUNCTION BLOCK AND WIRE HARNESS (CONNECTOR LOCATION)
1C	20	INSTRUMENT PANEL WIRE AND DRIVER SIDE J/B (LEFT KICK PANEL)
1D		
1E		

▭ : CONNECTOR JOINING WIRE HARNESS AND WIRE HARNESS

CODE	SEE PAGE	JOINING WIRE HARNESS AND WIRE HARNESS (CONNECTOR LOCATION)
IF1	34	INSTRUMENT PANEL WIRE AND SWITCH WIRE (NEAR THE STREERING COLUMN)

▽ : GROUND POINTS

CODE	SEE PAGE	GROUND POINTS LOCATION
IE	32	INSTRUMENT PANEL BRACE LH

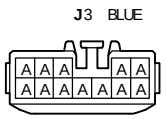

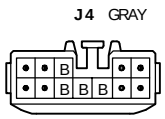

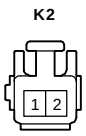

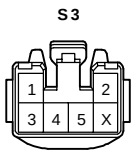

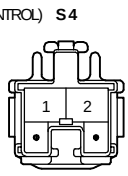

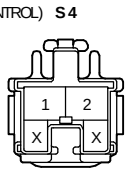

NOTICE: When inspecting or repairing the SRS, perform the operation in accordance with the following precautionary instructions and the procedure and precautions in the Repair Manual for the applicable model year.

- Malfunction symptoms of the SRS are difficult to confirm, so the DTCs become the most important source of information when troubleshooting. When troubleshooting the SRS, always inspect the DTCs before disconnecting the battery.
- **Work must be started after 90 seconds from the time the ignition switch is turned to the "LOCK" position and the negative (–) terminal cable is disconnected from the battery.**
  (The SRS is equipped with a back–up power source so that if work is started within 90 seconds of disconnecting the negative (–) terminal cable from the battery, the SRS may deploy).
  When the negative (–) terminal cable is disconnected from the battery, the memory of the clock and audio system will be canceled. So before starting work, make a record of the contents memorized by the audio memory system. When work is finished, reset the audio systems as before and adjust the clock. To avoid erasing the memory of each memory system, never use a back–up power supply from outside the vehicle.
- Even in cases of a minor collision where the SRS does not deploy, the steering wheel pad, front passenger airbag assembly and airbag sensor assembly should be inspected.
- Never use SRS parts from another vehicle. When replacing parts, replace them with new parts.
- Before repairs, remove the airbag sensor if shocks are likely to be applied to the sensor during repairs.
- Never disassemble and repair the steering wheel pad, front passenger airbag assembly or airbag sensor assembly in order to reuse it.
- If the steering wheel pad, front passenger airbag assembly or airbag sensor assembly has been dropped, or if there are cracks, dents or other defects in the case, bracket or connector, replace them with new ones.
- Do not expose the steering wheel pad, front passenger airbag assembly or airbag sensor assembly directly to hot air or flames.
- Use a volt/ohmmeter with high impedance (10kΩ/V minimum) for troubleshooting the system's electrical circuits.
- Information labels are attached to the periphery of the SRS components. Follow the instructions on the notices.
- After work on the SRS is completed, check the SRS warning light.
- If the vehicle is equipped with a mobile communication system, refer to the precaution in the IN section of the Repair Manual.

The SRS has connectors which possess the functions described below:

1. SRS ACTIVATION PREVENTION MECHANISM
   Each connector contains a short spring plate. When the connector is disconnected, the short spring plate automatically connects the power source and grounding terminals of the squib to preclude a potential difference between the terminals.

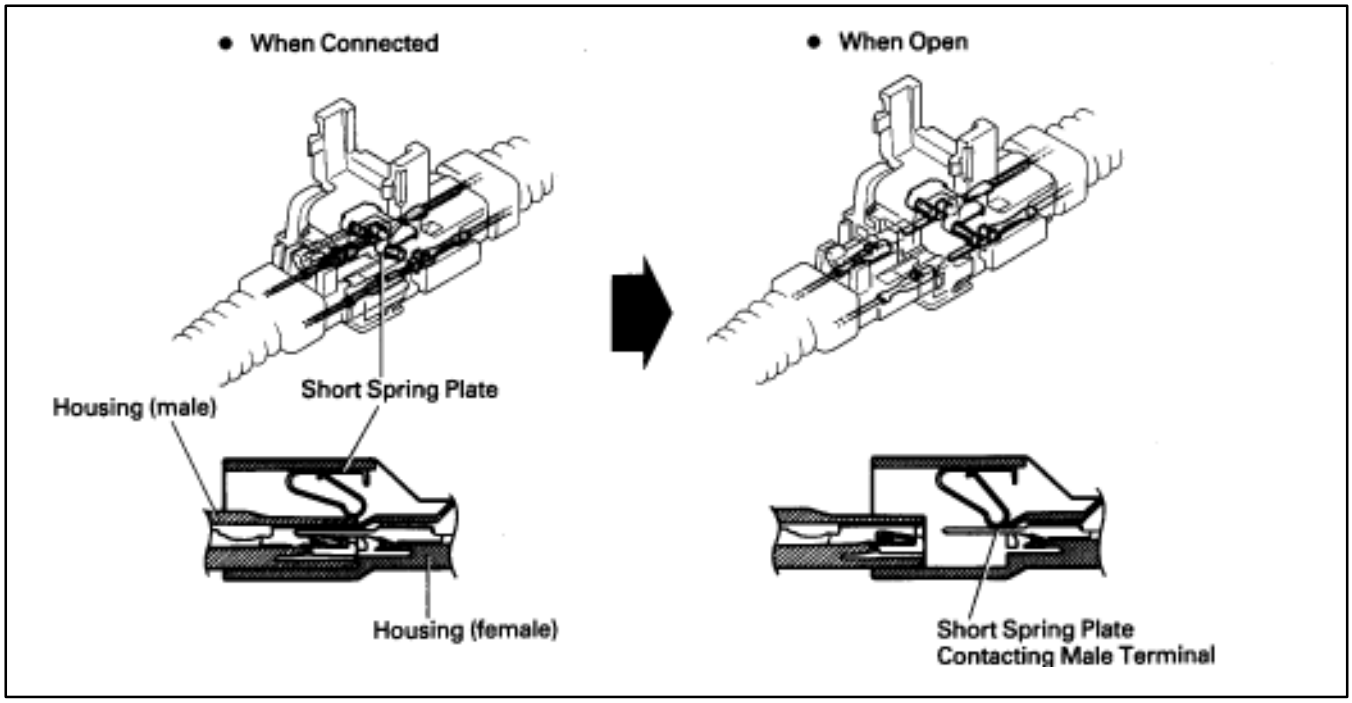

2. ELECTRICAL CONNECTION CHECK MECHANISM
   This mechanism electrically checks if connectors are connected correctly and completely.
   The electrical connection check mechanism is designed so that the disconnection detection pin connects with the diagnosis terminals when the connector housing lock is locked.

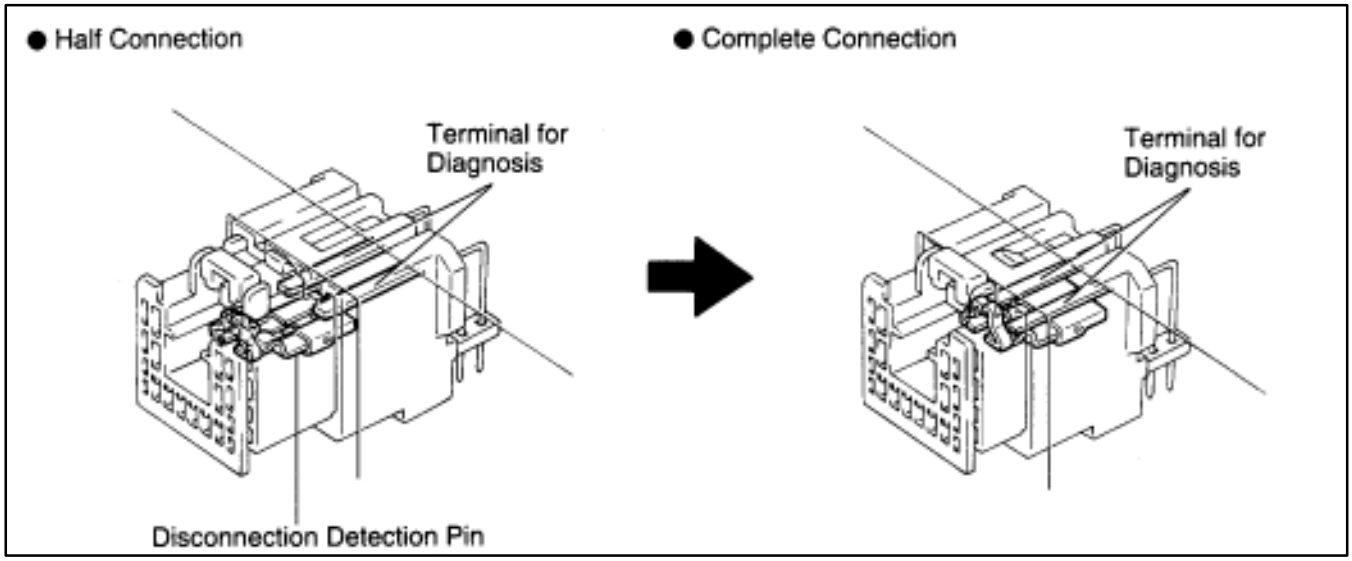

3. CONNECTOR TWIN–LOCK MECHANISM
With this mechanism connectors (male and female connectors) are locked by two locking devices to increase connection reliability. If the primary lock is incomplete, ribs interfere and prevent the secondary lock.

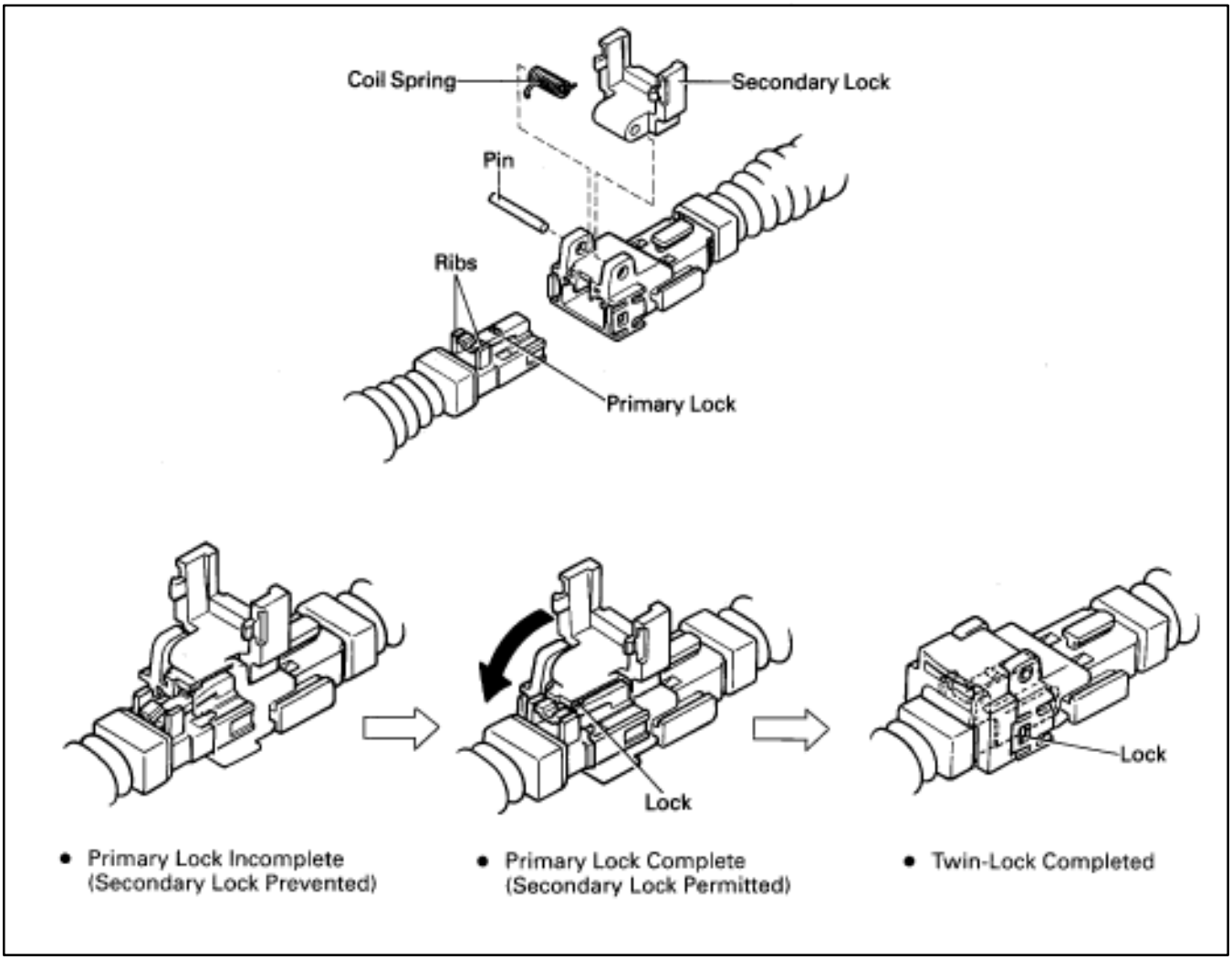

*1 : W/ FRONT PASSENGER' S AIRBAG
*2 : W/O FRONT PASSENGER' S AIRBAG

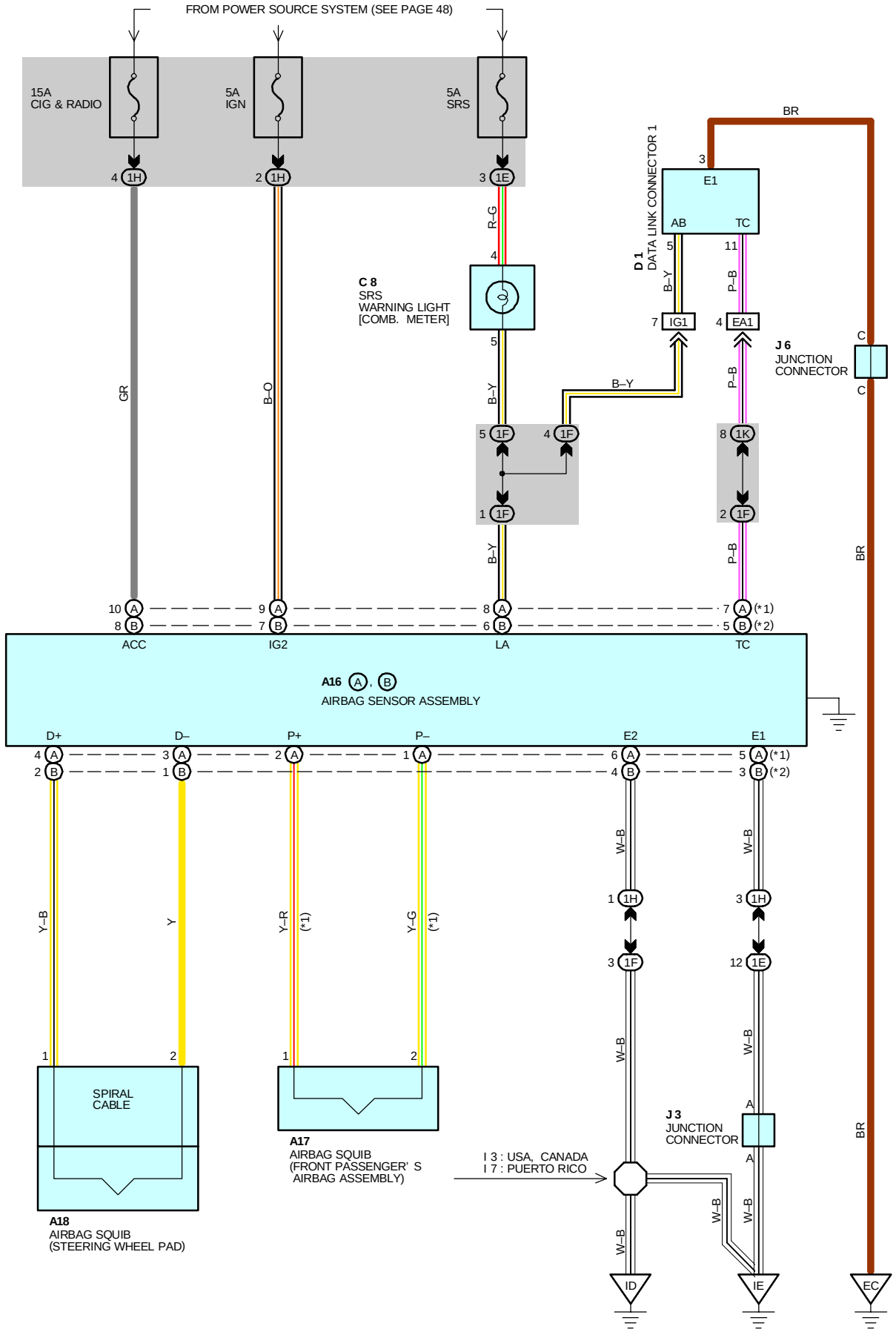

SYSTEM OUTLINE

THE SRS IS A DRIVER AND FRONT PASSENGER PROTECTION DEVICE WHICH HAS A SUPPLEMENTAL ROLE TO THE SEAT BELTS. WHEN THE IGNITION SW IS TURNED TO ACC OR ON. THE CURRENT FROM THE **CIG & RADIO** FUSE FLOWS TO **TERMINAL (A)10** OR **(B)8** OF THE AIRBAG SENSOR ASSEMBLY. ONLY WHEN THE IGNITION SW IS ON DOES THE CURRENT FROM THE IGN FUSE TO **TERMINAL (A)9** OR **(B)7**.

IF AN ACCIDENT OCCURS WHILE DRIVING, DECELERATION CAUSED BY A FRONTAL IMPACT IS DETECTED (BY THE SENSOR) AND WHEN THE FRONTAL IMPACT EXCEEDS A SET LEVEL. THE CURRENT FROM THE **CIG & RADIO** AND **IGN** FUSE FLOWS TO **TERMINALS (A)4**, **(A)2** OR **(B)2** OF THE AIRBAG SENSOR ASSEMBLY → **TERMINAL 1** OF THE AIRBAG SQUIBS → **TERMINAL 2** → **TERMINALS (A)3**, **(A)1** OR **(B)1** OF THE AIRBAG SENSOR ASSEMBLY → **TERMINALS (A)6**, **(A)5** OR **(B)4**, **(B)3** OR **BODY GROUND** → **GROUND**.

WHEN THE SAFING SENSOR BUILT INTO THE AIRBAG SENSOR ASSEMBLY IS ON, THE AIRBAG SENSOR IS OFF AND THE CURRENT FROM THE **CIG & RADIO** AND **IGN** FUSE FLOWS TO **TERMINALS (A)4**, **(A)2**, OR **(B)2** OF THE AIRBAG SENSOR ASSEMBLY → **TERMINAL 1** OF THE AIRBAG SQUIBS → **TERMINAL 2** → **TERMINALS (A)3**, **(A)1** OR **(B)1** OF THE AIRBAG SENSOR ASSEMBLY → **TERMINALS (A)6**, **(A)5** OR **(B)4**, **(B)3** OR **BODY GROUND** → **GROUND**. WHEN THE SAFING SENSOR BUILT INTO THE AIRBAG SENSOR ASSEMBLY IS ON AND AIRBAG SENSOR IS ON, ONE OF THE ABOVE–MENTIONED CIRCUITS IS ACTIVATED SO THAT THE CURRENT FLOWS TO THE AIRBAG SQUIBS AND CAUSES IT TO OPERATE.

THE AIRBAG STORED INSIDE THE STEERING WHEEL PAD IS INSTANTANEOUSLY EXPANDED TO SOFTEN THE SHOCK TO THE DRIVER.

THE AIRBAG STORED INSIDE THE PASSENGER'S INSTRUMENT PANEL IS INSTANTANEOUSLY EXPANDED TO SOFTEN THE SHOCK TO THE PASSENGER.

: PARTS LOCATION

CODE		SEE PAGE	CODE	SEE PAGE	CODE	SEE PAGE
A16	A	26	A18	26	J3	27
	B	26	C8	26	J6	27
A17		26	D1	24		

: JUNCTION BLOCK AND WIRE HARNESS CONNECTOR

CODE	SEE PAGE	JUNCTION BLOCK AND WIRE HARNESS (CONNECTOR LOCATION)
1E	20	INSTRUMENT PANEL WIRE AND DRIVER SIDE J/B (LEFT KICK PANEL)
1F		
1H		
1K	20	ENGINE ROOM MAIN WIRE AND DRIVER SIDE J/B (LEFT KICK PANEL)

: CONNECTOR JOINING WIRE HARNESS AND WIRE HARNESS

CODE	SEE PAGE	JOINING WIRE HARNESS AND WIRE HARNESS (CONNECTOR LOCATION)
EA1	30	ENGINE WIRE AND ENGINE ROOM MAIN WIRE (INSIDE OF THE ENGINE ROOM R/B)
IG1	34	ENGINE WIRE AND INSTRUMENT PANEL WIRE (NEAR THE BLOWER UNIT)

: GROUND POINTS

CODE	SEE PAGE	GROUND POINTS LOCATION
EC	30	RIGHT SIDE OF THE SURGE TANK
ID	32	LEFT KICK PANEL
IE	32	INSTRUMENT PANEL BRACE LH

: SPLICE POINTS

CODE	SEE PAGE	WIRE HARNESS WITH SPLICE POINTS	CODE	SEE PAGE	WIRE HARNESS WITH SPLICE POINTS
I3	34	INSTRUMENT PANEL WIRE	I7	34	INSTRUMENT PANEL WIRE

A16 (A) YELLOW

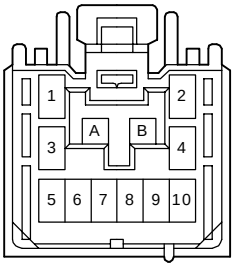

A16 (B) YELLOW

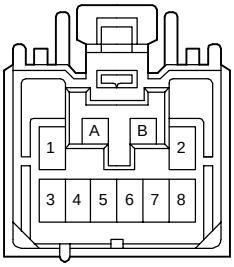

A17 YELLOW

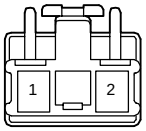

A18 YELLOW

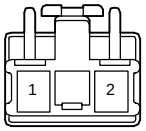

C 8 BROWN

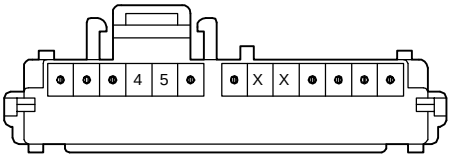

D 1 BLACK

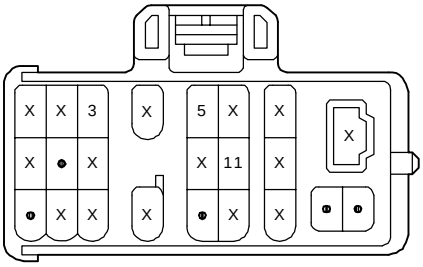

J 3 BLUE

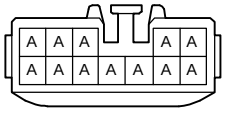

(HINT : SEE PAGE 7)

J 6 GRAY

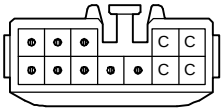

(HINT : SEE PAGE 7)

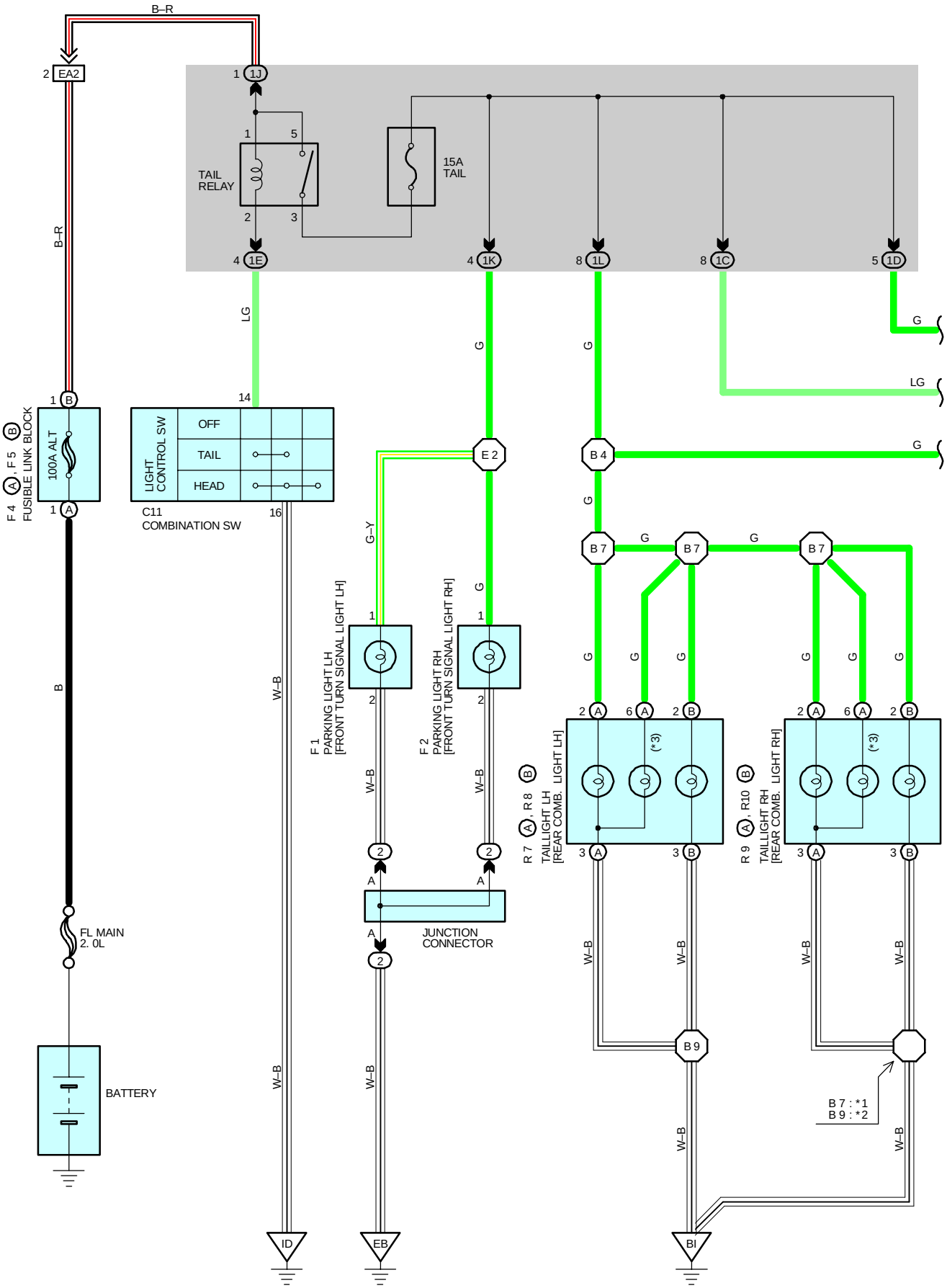
B–R
2 EA2
1 1J
TAIL RELAY
15A TAIL
4 1E
4 1K
8 1L
8 1C
5 1D
LG
G
LG
G
1 B
F 4 , F 5 FUSIBLE LINK BLOCK
100A ALT
1 A
B
FL MAIN 2. 0L
BATTERY
14
LIGHT CONTROL SW
OFF
TAIL
HEAD
C11 COMBINATION SW
16
W–B
ID
E 2
B 4
G–Y
F 1 PARKING LIGHT LH [FRONT TURN SIGNAL LIGHT LH]
F 2 PARKING LIGHT RH [FRONT TURN SIGNAL LIGHT RH]
JUNCTION CONNECTOR
EB
B 7
B 9
B 7 : *1
B 9 : *2
BI
R 7 , R 8 TAILLIGHT LH [REAR COMB. LIGHT LH]
R 9 , R10 TAILLIGHT RH [REAR COMB. LIGHT RH]
(*3)

* 1 : C/P
* 2 : CONVERTIBLE
* 3 : REAR SIDE MARKER

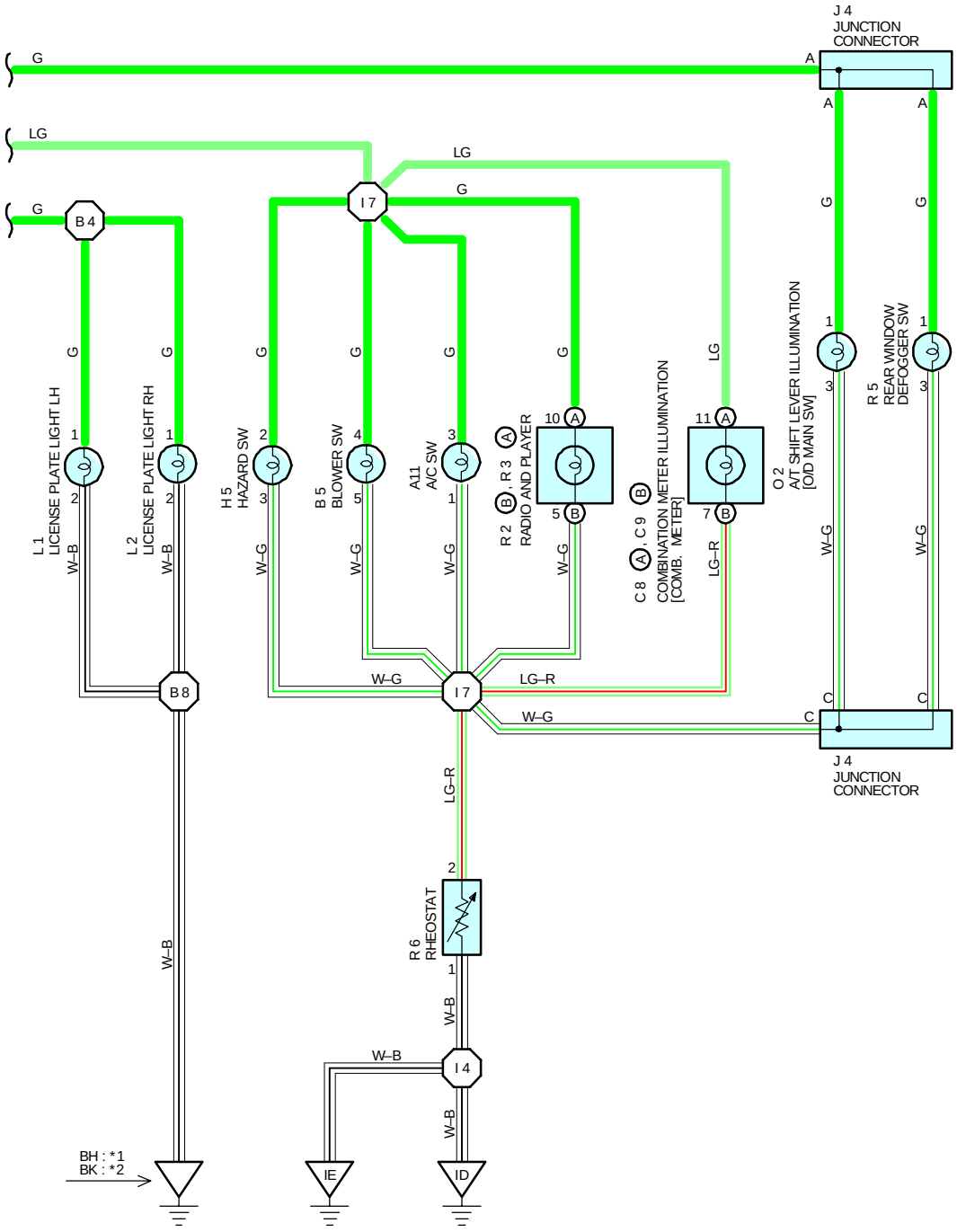

TAILLIGHT AND ILLUMINATION

SERVICE HINTS

C11 COMBINATION SW

14–16 : CLOSED WITH THE LIGHT CONTROL SW AT TAIL OR HEAD POSITION

TAIIL RELAY

5–3 : CLOSED WITH THE LIGHT CONTROL SW AT TAIL OR HEAD POSITION

○ : PARTS LOCATION

CODE	SEE PAGE	CODE	SEE PAGE	CODE	SEE PAGE
A11	26	F 5 B	24	R 5	27
B 5	26	H 5	26	R 6	27
C 8 A	26	J 4	27	R 7 A	28 (C/P) , 29 (CONVERTIBLE)
C 9 B	26	L 1	28 (C/P) , 29 (CONVERTIBLE)	R 8 B	28 (C/P) , 29 (CONVERTIBLE)
C11	26	L 2	28 (C/P) , 29 (CONVERTIBLE)	R 9 A	28 (C/P) , 29 (CONVERTIBLE)
F 1	24	O 2	27	R10 B	28 (C/P) , 29 (CONVERTIBLE)
F 2	24	R 2 B	27		
F 4 A	24	R 3 A	27		

⬭ : RELAY BLOCKS

CODE	SEE PAGE	RELAY BLOCKS (RELAY BLOCK LOCATION)
2	22	ENGINE ROOM R/B (ENGINE COMPARTMENT LEFT)

⬭ : JUNCTION BLOCK AND WIRE HARNESS CONNECTOR

CODE	SEE PAGE	JUNCTION BLOCK AND WIRE HARNESS (CONNECTOR LOCATION)
1C	20	INSTRUMENT PANEL WIRE AND DRIVER SIDE J/B (LEFT KICK PANEL)
1D		
1E		
1J	20	ENGINE ROOM MAIN WIRE AND DRIVER SIDE J/B (LEFT KICK PANEL)
1K		
1L	20	FLOOR WIRE AND DRIVER SIDE J/B (LEFT KICK PANEL)

▭ : CONNECTOR JOINING WIRE HARNESS AND WIRE HARNESS

CODE	SEE PAGE	JOINING WIRE HARNESS AND WIRE HARNESS (CONNECTOR LOCATION)
EA2	30	ENGINE WIRE AND ENGINE ROOM MAIN WIRE (INSIDE OF THE ENGINE ROOM R/B)

▽ : GROUND POINTS

CODE	SEE PAGE	GROUND POINTS LOCATION
EB	30	FRONT SIDE OF THE LEFT FENDER
ID	32	LEFT KICK PANEL
IE	32	INSTRUMENT PANEL BRACE LH
BH	36 (C/P)	LEFT SIDE OF THE UPPER BACK PANEL
BI	36 (C/P)	LOWER BACK PANEL CENTER
	37 (CONVERTIBLE)	
BK	37 (CONVERTIBLE)	UPPER THE REAR WHEEL HOUSE LH

⯃ : SPLICE POINTS

CODE	SEE PAGE	WIRE HARNESS WITH SPLICE POINTS	CODE	SEE PAGE	WIRE HARNESS WITH SPLICE POINTS
E 2	30	ENGINE ROOM MAIN WIRE	B 7	37 (CONVERTIBLE)	FLOOR WIRE
I 4	34	INSTRUMENT PANEL WIRE	B 8	36 (C/P)	
I 7				37 (CONVERTIBLE)	
B 4	36 (C/P)	FLOOR WIRE	B 9	36 (C/P)	
	37 (CONVERTIBLE)			37 (CONVERTIBLE)	
B 7	36 (C/P)				

A11 BLACK

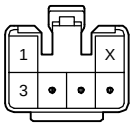

B 5

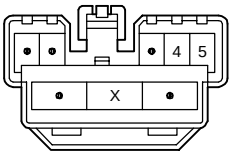

C 8 (A) BROWN

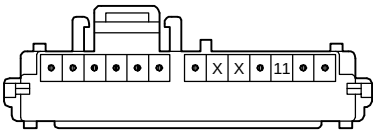

(USA, CANADA) C 9 (B)

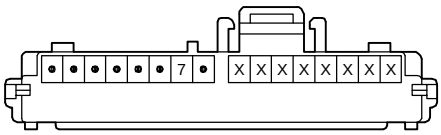

(PUERTO RICO) C 9 (B)

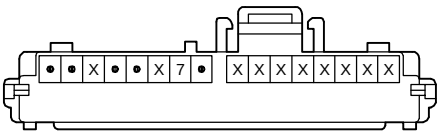

(USA, PUERTO RICO) C11

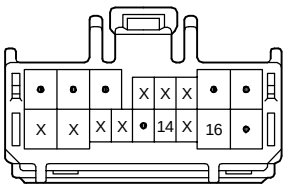

(CANADA) C11

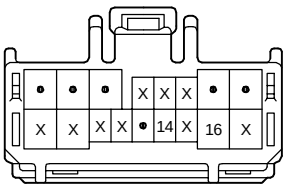

F 1 GRAY

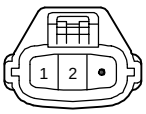

F 2 GRAY

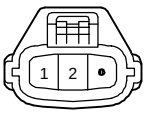

F 4 (A), F 5 (B)

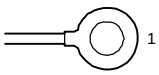

H 5 BLACK

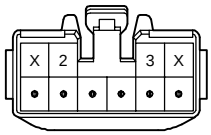

J 4 GRAY

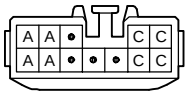

(HINT : SEE PAGE 7)

L 1 GRAY

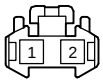

L 2 GRAY

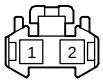

O 2

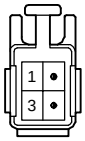

R 2 (B)

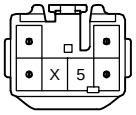

R 3 (A)

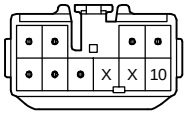

R 5 BLACK

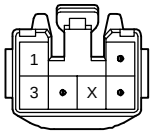

R 6



R 7 (A)

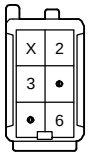

R 8 (B)

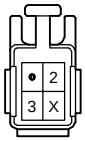

R 9 (A)

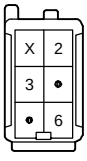

R10 (B)

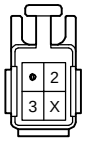

SYSTEM OUTLINE

CURRENT ALWAYS FLOWS TO **TERMINAL (B)9** OF THE THEFT DETERRENT AND DOOR LOCK CONTROL ECU THROUGH THE **POWER** FUSE, AND TO **TERMINAL (A)1** OF THE THEFT DETERRENT AND LOCK CONTROL ECU THROUGH THE **DOME** FUSE.

1. MANUAL LOCK OPERATION

WHEN THE DOOR LOCK CONTROL SW LH OR DOOR KEY AND UNLOCK SW LH, RH IS PUSHED TO LOCK POSITION, A LOCK SIGNAL IS INPUT TO **TERMINAL (A)5** OR **(A)22** OF THE THEFT DETERRENT AND DOOR LOCK CONTROL ECU AND CAUSES THE ECU TO FUNCTION. THEN THE CURRENT FLOWS FROM **TERMINAL (B)9** OF THE THEFT DETERRENT AND DOOR LOCK CONTROL ECU TO **TERMINAL (B)3 ➔ TERMINAL 5** OF THE DOOR LOCK MOTOR AND DOOR UNLOCK DETECTION SW LH, RH **➔ TERMINAL 4 ➔ TERMINAL (B)2** OF THE THEFT DETERRENT AND DOOR LOCK CONTROL ECU **➔ TERMINAL (B)4 ➔ GROUND** AND THE DOOR LOCK MOTOR CAUSES THE DOOR TO LOCK.

2. MANUAL UNLOCK OPERATION

WHEN THE DOOR LOCK CONTROL SW LH OR DOOR KEY LOCK AND UNLOCK SW LH, RH IS PUSHED TO **UNLOCK** POSITION, AN UNLOCK SIGNAL IS INPUT TO **TERMINAL (A)8, (A)6 AND (A)16** OF THE THEFT DETERRENT AND DOOR LOCK CONTROL ECU AND CAUSES TO FUNCTION. THEN THE CURRENT FLOWS FROM **TERMINAL (B)9** OF THE THEFT DETERRENT AND DOOR LOCK CONTROL ECU TO **TERMINAL (B)2 ➔ TERMINAL 4** OF THE DOOR LOCK MOTOR AND DOOR UNLOCK DETECTION SW LH, RH **➔ TERMINAL 5 ➔ TERMINAL (B)3** OF THE THEFT DETERRENT AND DOOR LOCK CONTROL ECU **➔ TERMINAL (B)4 ➔ GROUND** AND THE DOOR LOCK MOTOR CAUSES EACH DOOR TO UNLOCK.

WHEN UNLOCK OPERATION OCCURS USING THE DOOR KEY LOCK AND UNLOCK SW LH, PERFORMING THE UNLOCK OPERATION ONCE UNLOCKS ONLY THE DRIVER'S DOOR. TO UNLOCK THE OTHER DOOR TOGETHER, UNLOCK OPERATION MUST BE PERFORMED AGAIN WITHIN 3 SECONDS OF THE FIRST OPERATION.

3. DOUBLE OPERATION UNLOCK OPERATION

WHEN THE DOOR LOCK CONTROL SW LH IS TURNED TO THE UNLOCK SIDE, ONLY THE DRIVER'S DOOR IS MECHANICALLY UNLOCKED. TURNING THE DOOR KEY LOCK AND UNLOCK SW LH TO THE UNLOCK SIDE CAUSES A SIGNAL TO BE INPUT TO **TERMINAL (A)6** OF THE THEFT DETERRENT AND DOOR LOCK CONTROL ECU, AND IF A SIGNAL INPUT WITHIN 3 SECONDS BY TURNING THE SW TO THE UNLOCK SIDE AGAIN, THE CURRENT FLOWS FROM **TERMINAL (B)9** OF THE THEFT DETERRENT AND DOOR LOCK CONTROL ECU TO **TERMINAL (B) ➔ 2 TERMINAL 4** OF THE DOOR LOCK MOTOR AND DOOR UNLOCK DETECTION SW LH, RH **➔ TERMINAL 5 ➔ TERMINAL (B)3** OF THE THEFT DETERRENT AND DOOR LOCK CONTROL ECU **➔ TERMINAL (B)4 ➔ GROUND** AND THE DOOR LOCK MOTOR CAUSES EACH DOOR TO UNLOCK.

4. IGNITION KEY REMINDER OPERATION

* OPERATION OF THE DOOR LOCK BUTTON (OPERATION OF DOOR LOCK MOTORS)
  WHEN THE IGNITION KEY IS IN THE CYLINDER (UNLOCK WARNING SW ON) AND THE DOOR IS OPENED AND LOCKED USING DOOR LOCK BUTTON (DOOR LOCK CONTROL MOTOR), THE DOOR IS LOCKED ONCE BUT EACH DOOR IS UNLOCKED SOON BY THE OPERATION OF THE THEFT DETERRENT AND DOOR LOCK CONTROL ECU. AS A RESULT OF THE THEFT DETERRENT AND DOOR LOCK CONTROL ECU ACTIVATION, THE CURRENT FLOWS FROM **TERMINAL (B)9** OF THE DETERRENT AND DOOR LOCK CONTROL ECU TO **TERMINAL (B)2 ➔ TERMINAL 4** OF THE DOOR LOCK MOTOR AND UNLOCK DETECTION SW LH, RH **➔ TERMINAL 5 ➔ TERMINAL (B)3** OF THE THEFT DETERRENT AND DOOR LOCK CONTROL ECU **➔ TERMINAL (B)4 ➔ GROUND**, CAUSING ALL DOORS TO UNLOCK.
* KEY LESS LOCK OPERATION
  WHEN THE IGNITION KEY IS STILL INSERTED IN THE CYLINDER (UNLOCK WARNING SW ON), THE DOOR IS OPEN AND UNLOCK OPERATION IS PREVENTED BY KEEPING THE DOOR LOCK BUTTON PRESSED TO THE LOCK SIDE, THE DOOR IS KEPT IN THE LOCK CONDITION. IF THE DOOR IS THEN CLOSED, A SIGNAL IS INPUT TO THE THEFT DETERRENT AND DOOR LOCK CONTROL ECU FROM THE DOOR COURTESY SW. THIS ACTIVATES THE THEFT DETERRENT AND DOOR LOCK CONTROL ECU AND EACH DOOR IS UNLOCKED.

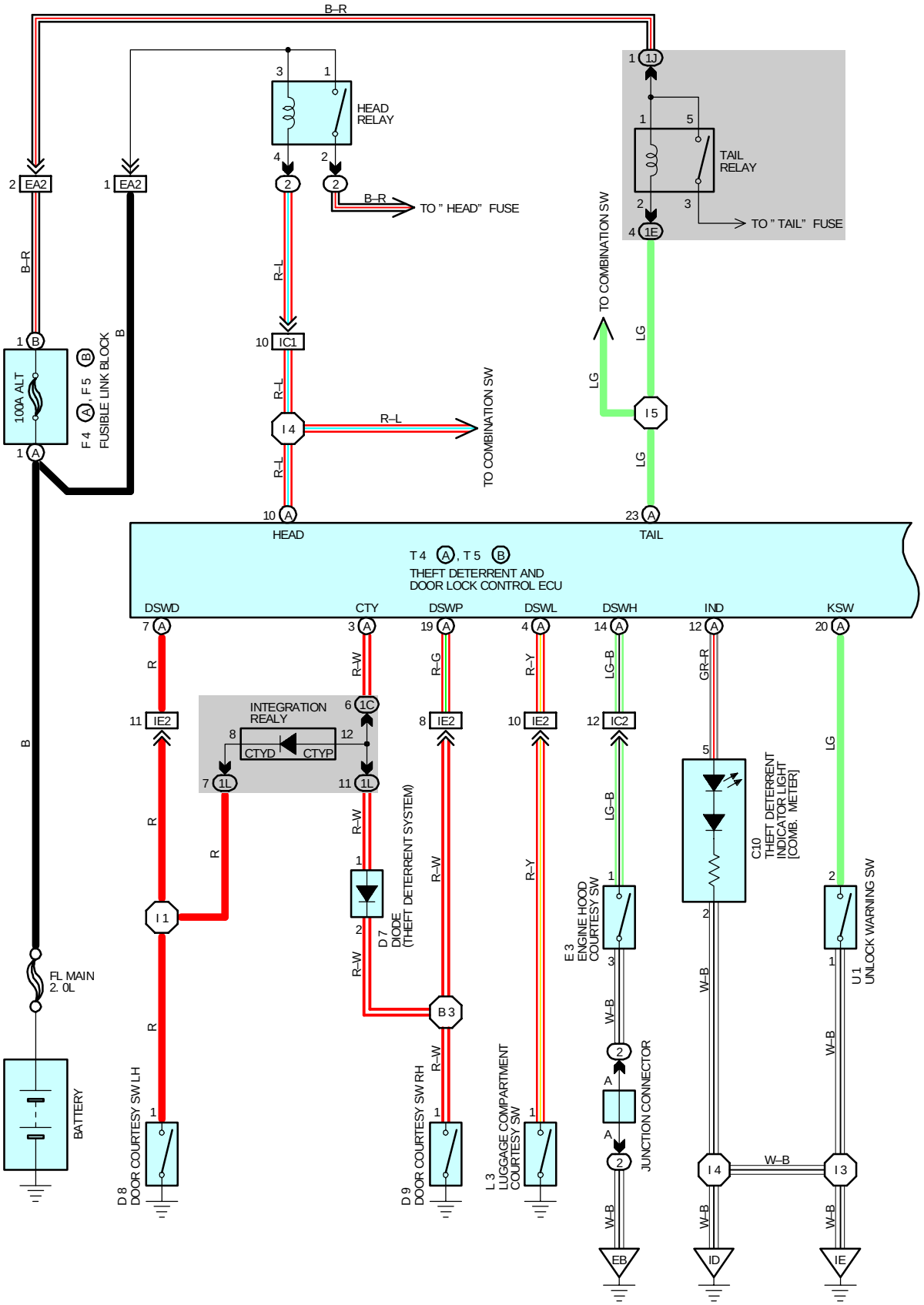
B–R
HEAD RELAY
TAIL RELAY
TO " HEAD" FUSE
TO " TAIL" FUSE
TO COMBINATION SW
2 EA2
1 EA2
100A ALT
F 4 A, F 5 B FUSIBLE LINK BLOCK
FL MAIN 2. 0L
BATTERY
IC1
I 4
I 5
1J
1E
HEAD
TAIL
T 4 A, T 5 B
THEFT DETERRENT AND DOOR LOCK CONTROL ECU
DSWD
CTY
DSWP
DSWL
DSWH
IND
KSW
INTEGRATION REALY
CTYD
CTYP
IE2
IC2
1C
1L
I 1
B 3
D 7 DIODE (THEFT DETERRENT SYSTEM)
D 8 DOOR COURTESY SW LH
D 9 DOOR COURTESY SW RH
L 3 LUGGAGE COMPARTMENT COURTESY SW
E 3 ENGINE HOOD COURTESY SW
JUNCTION CONNECTOR
C10 THEFT DETERRENT INDICATOR LIGHT [COMB. METER]
U 1 UNLOCK WARNING SW
I 3
I 4
EB
ID
IE
R
R–L
R–W
R–G
R–Y
LG
LG–B
GR–R
W–B
B

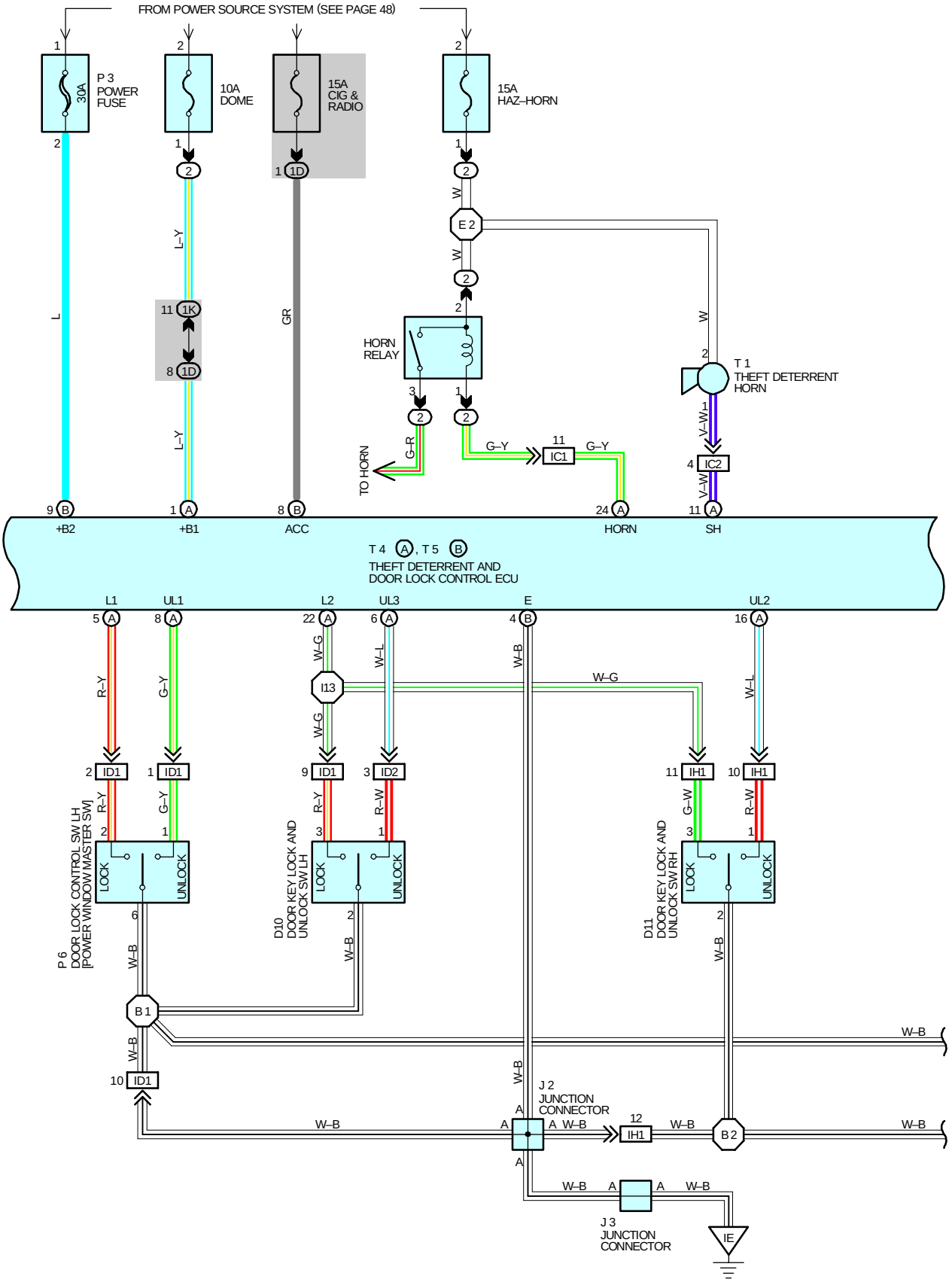
FROM POWER SOURCE SYSTEM (SEE PAGE 48)
P 3
POWER
FUSE
30A
10A
DOME
15A
CIG &
RADIO
15A
HAZ–HORN
HORN
RELAY
TO HORN
T 1
THEFT DETERRENT
HORN
+B2
+B1
ACC
HORN
SH
T 4 A, T 5 B
THEFT DETERRENT AND
DOOR LOCK CONTROL ECU
L1
UL1
L2
UL3
E
UL2
P 6
DOOR LOCK CONTROL SW LH
[POWER WINDOW MASTER SW]
D10
DOOR KEY LOCK AND
UNLOCK SW LH
D11
DOOR KEY LOCK AND
UNLOCK SW RH
LOCK
UNLOCK
J 2
JUNCTION
CONNECTOR
J 3
JUNCTION
CONNECTOR
IE

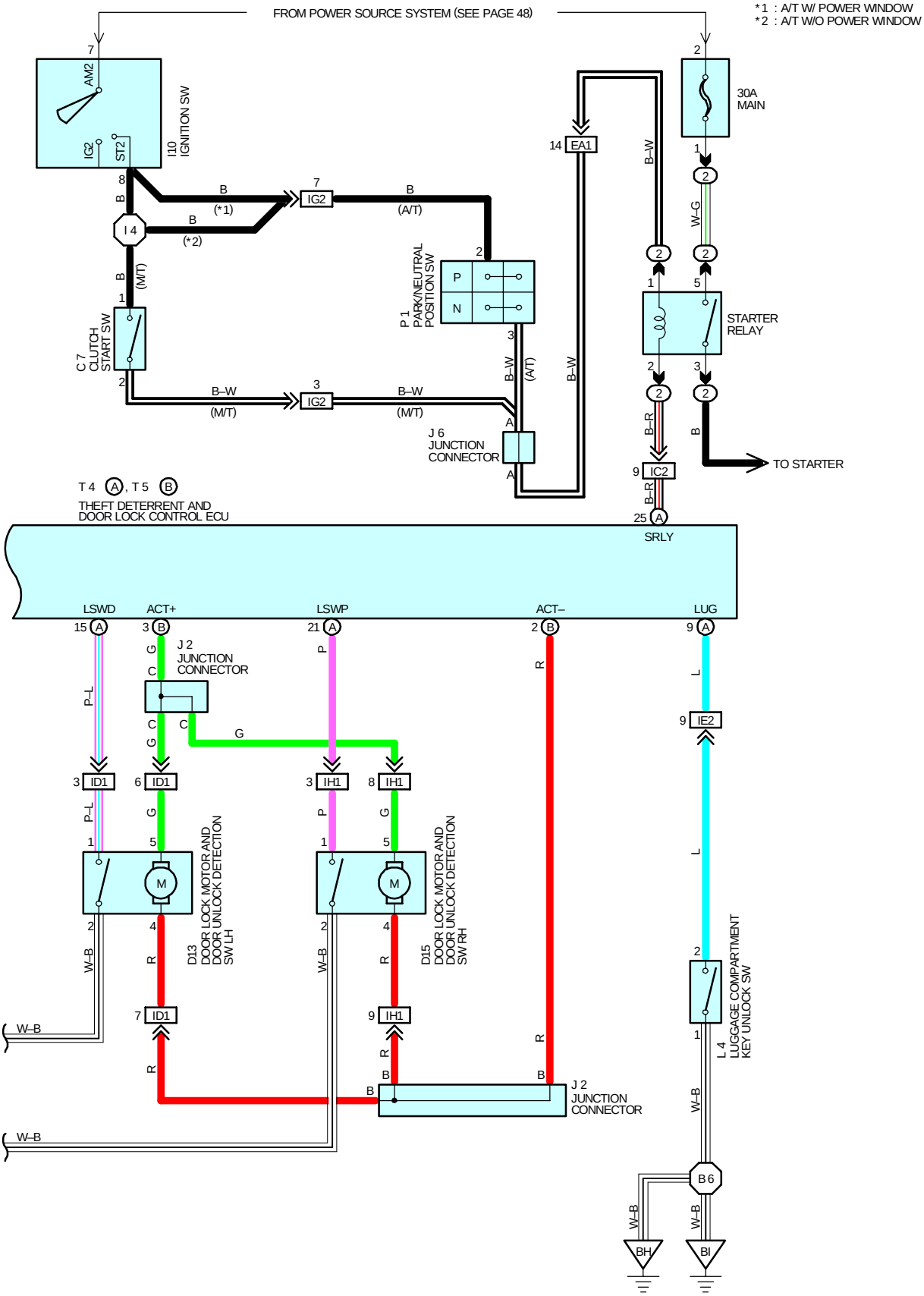
FROM POWER SOURCE SYSTEM (SEE PAGE 48)
*1 : A/T W/ POWER WINDOW
*2 : A/T W/O POWER WINDOW
I10 IGNITION SW
AM2
IG2
ST2
30A MAIN
STARTER RELAY
TO STARTER
C 7 CLUTCH START SW
P 1 PARK/NEUTRAL POSITION SW
J 6 JUNCTION CONNECTOR
J 2 JUNCTION CONNECTOR
L 4 LUGGAGE COMPARTMENT KEY UNLOCK SW
T 4 A, T 5 B
THEFT DETERRENT AND DOOR LOCK CONTROL ECU
SRLY
LSWD
ACT+
LSWP
ACT–
LUG
D13 DOOR LOCK MOTOR AND DOOR UNLOCK DETECTION SW LH
D15 DOOR LOCK MOTOR AND DOOR UNLOCK DETECTION SW RH
B 6
BH
BI
W–B

SERVICE HINTS

D10, D11 DOOR KEY LOCK AND UNLOCK SW LH, RH

1–2 : CLOSED WITH THE DOOR KEY CYLINDER UNLOCKED WITH THE KEY
3–2 : CLOSED WITH THE DOOR KEY CYLINDER LOCKED WITH THE KEY

D13, D15 DOOR LOCK MOTOR AND DOOR UNLOCK DETECTION SW LH, RH

1–2 : CLOSED WITH THE DOOR UNLOCK DETECTION SW LH, RH AT **UNLOCK** POSITION

E 3 ENGINE HOOD COURTESY SW

1–3 : CLOSED WITH THE ENGINE HOOD OPEN

U 1 UNLOCK WARNING SW

2–1 : CLOSED WITH THE KEY IN THE IGNITION KEY CYLINDER

L 4 LUGGAGE COMPARTMENT KEY UNLOCK SW

2–1 : CLOSED WITH THE LUGGAGE COMPARTMENT KEY CYLINDER UNLOCK WITH THE KEY

L 3 LUGGAGE COMPARTMENT COURTESY SW

1–GROUND : CLOSED WITH THE LUGGAGE COMPARTMENT DOOR OPEN

T 4(A), T 5(B) THEFT DETERRENT AND DOOR LOCK CONTROL ECU

(A)25–GROUND : CONTINUITY WITH THE SHIFT LEVER IN N OR P POSITION AND THE IGNITION SW AT ST POSITION (A/T)
CONTINUITY WITH THE CLUTCH PEDAL DEPRESSED AND THE IGNITION SW AT ST POSITION (M/T)
(A)20–GROUND : CONTINUITY WITH THE KEY IN THE IGNITION KEY CYLINDER
(A)21–GROUND : CONTINUITY WITH THE RH DOOR TO **UNLOCK** POSITION
(B) 9–GROUND : ALWAYS APPROX. **12** VOLTS
(A) 6–GROUND : CONTINUITY WITH THE DOOR KEY LOCK AND UNLOCK SW LH TO **UNLOCK** POSITION
(A)15–GROUND : CONTINUITY WITH THE LH DOOR TO **UNLOCK** POSITION
(A)19–GROUND : CONTINUITY WITH THE RH DOOR OPEN
(A) 7–GROUND : CONTINUITY WITH THE LH DOOR OPEN
(A)22–GROUND : CONTINUITY WITH THE DOOR KEY LOCK AND UNLOCK SW LH, RH TO **LOCK** POSITION
(B) 4–GROUND : ALWAYS CONTINUITY
(A)16–GROUND : CONTINUITY WITH THE DOOR KEY LOCK AND UNLOCK SW RH TO **UNLOCK** POSITION
(A) 1–GROUND : ALWAYS APPROX. **12** VOLTS
(A) 9–GROUND : CONTINUITY WITH THE LUGGAGE COMPARTMENT KEY UNLOCK SW TO **UNLOCK** POSITION
(A) 3–GROUND : CONTINUITY WITH THE RH DOOR OPEN
(A)14–GROUND : CONTINUITY WITH THE ENGINE HOOD OPEN
(A) 4–GROUND : CONTINUITY WITH THE LUGGAGE COMPARTMENT DOOR OPEN
(B) 8–GROUND : APPROX. 12 VOLTS WITH THE IGNITION SW AT **ACC** OR **ON** POSITION

: PARTS LOCATION

CODE	SEE PAGE	CODE	SEE PAGE	CODE	SEE PAGE
C 7	26	E 3	24	P 1	25
C10	26	F 4 A	24	P 3	27
D 7	28(C/P)	F 5 B	24	P 6	28(C/P)
D 8	28(C/P)	I10	27	T 1	25
D 9	28(C/P)	J 2	27	T 4 A	27
D10	28(C/P)	J 3	27	T 5 B	27
D11	28(C/P)	J 6	27	U 1	27
D13	28(C/P)	L 3	28(C/P)		
D15	28(C/P)	L 4	28(C/P)		

: RELAY BLOCKS

CODE	SEE PAGE	RELAY BLOCKS (RELAY BLOCK LOCATION)
2	22	ENGINE ROOM R/B (ENGINE COMPARTMENT LEFT)

: JUNCTION BLOCK AND WIRE HARNESS CONNECTOR

CODE	SEE PAGE	JUNCTION BLOCK AND WIRE HARNESS (CONNECTOR LOCATION)
1C	20	INSTRUMENT PANEL WIRE AND DRIVER SIDE J/B (LEFT KICK PANEL)
1D		
1E		
1J	20	ENGINE ROOM MAIN WIRE AND DRIVER SIDE J/B (LEFT KICK PANEL)
1K		
1L	20	FLOOR WIRE AND DRIVER SIDE J/B (LEFT KICK PANEL)

: CONNECTOR JOINING WIRE HARNESS AND WIRE HARNESS

CODE	SEE PAGE	JOINING WIRE HARNESS AND WIRE HARNESS (CONNECTOR LOCATION)
EA1	30	ENGINE WIRE AND ENGINE ROOM MAIN WIRE (INSIDE OF THE ENGINE ROOM R/B)
EA2		
IC1	32	INSTRUMENT PANEL WIRE AND ENGINE ROOM MAIN WIRE (LEFT KICK PANEL)
IC2		
ID1	32	FRONT DOOR LH WIRE AND INSTRUMENT PANEL WIRE (LEFT KICK PANEL)
ID2		
IE2	32	INSTRUMENT PANEL WIRE AND FLOOR WIRE (LEFT KICK PANEL)
IG2	34	ENGINE WIRE AND INSTRUMENT PANEL WIRE (NEAR THE BLOWER UNIT)
IH1	34	FRONT DOOR RH WIRE AND INSTRUMENT PANEL WIRE (RIGHT KICK PANEL)

: GROUND POINTS

CODE	SEE PAGE	GROUND POINTS LOCATION
EB	30	FRONT SIDE OF THE LEFT FENDER
ID	32	LEFT KICK PANEL
IE	32	INSTRUMENT PANEL BRACE LH
BH	36(C/P)	LEFT SIDE OF THE UPPER BACK PANEL
BI	36(C/P)	LOWER BACK PANEL CENTER

: **SPLICE POINTS**

CODE	SEE PAGE	WIRE HARNESS WITH SPLICE POINTS	CODE	SEE PAGE	WIRE HARNESS WITH SPLICE POINTS
E 2	30	ENGINE ROOM MAIN WIRE	B 1	36(C/P)	FRONT DOOR LH WIRE
I 1	34	FLOOR WIRE	B 2	36(C/P)	FRONT DOOR RH WIRE
I 3	34	INSTRUMENT PANEL WIRE	B 3	36(C/P)	FLOOR WIRE
I 4			B 6		
I 5					

C 7

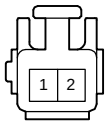

C10 GRAY

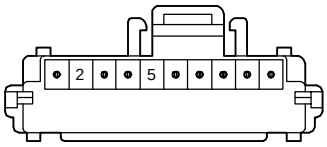

D 7 BLACK



D 8



D 9

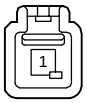

D10 BLUE

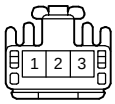

D11 BLUE

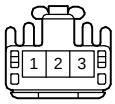

D13

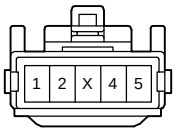

D15

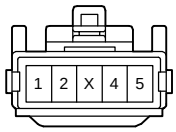

E 3 BLACK



F 4 (A), F 5 (B)

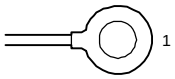

I10

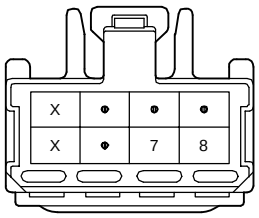

J 2 GRAY

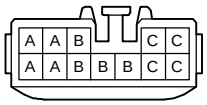

(HINT : SEE PAGE 7)

J 3 BLUE

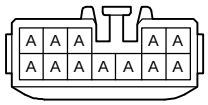

(HINT : SEE PAGE 7)

J 6 GRAY

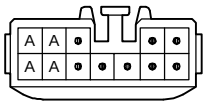

(HINT : SEE PAGE 7)

L 3 GRAY



L 4

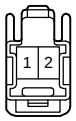

P 1 GRAY

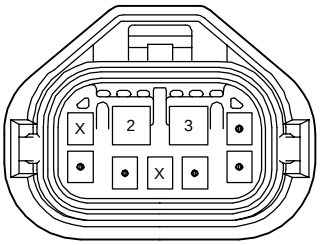

P 3

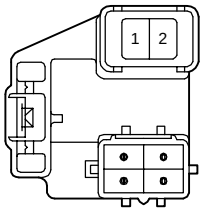

P 6

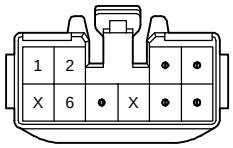

T 1 BLACK

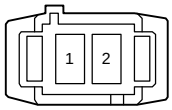

T 4 (A) ORANGE

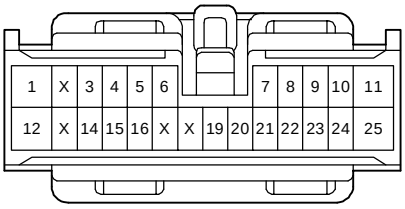

T 5 (B) ORANGE

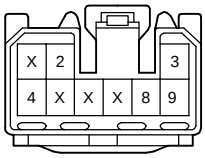

U 1 BLACK

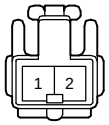

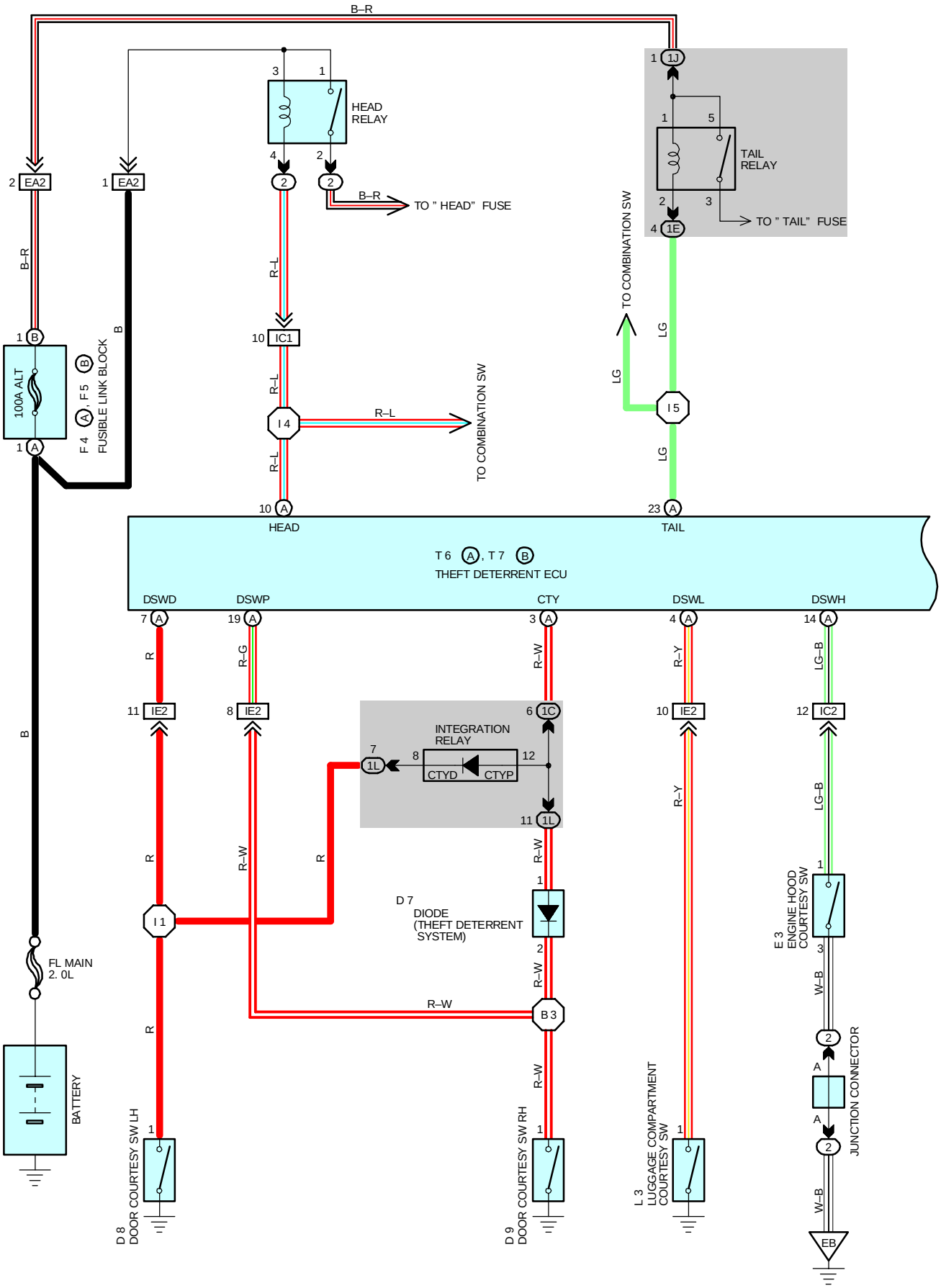
B–R
HEAD RELAY
TO " HEAD" FUSE
TAIL RELAY
TO " TAIL" FUSE
TO COMBINATION SW
2 EA2
1 EA2
B–R
B
1 B
100A ALT
F 4 A, F 5 B FUSIBLE LINK BLOCK
1 A
R–L
10 IC1
I 4
10 A
HEAD
1 1J
1 5
2 3
4 1E
LG
I 5
23 A
TAIL
T 6 A, T 7 B
THEFT DETERRENT ECU
DSWD
DSWP
CTY
DSWL
DSWH
7 A
19 A
3 A
4 A
14 A
R
R–G
R–W
R–Y
LG–B
11 IE2
8 IE2
10 IE2
12 IC2
INTEGRATION RELAY
7 1L
8
12
CTYD
CTYP
6 1C
11 1L
I 1
D 7
DIODE
(THEFT DETERRENT SYSTEM)
B 3
FL MAIN
2. 0L
BATTERY
D 8
DOOR COURTESY SW LH
D 9
DOOR COURTESY SW RH
L 3
LUGGAGE COMPARTMENT COURTESY SW
E 3
ENGINE HOOD COURTESY SW
W–B
JUNCTION CONNECTOR
EB

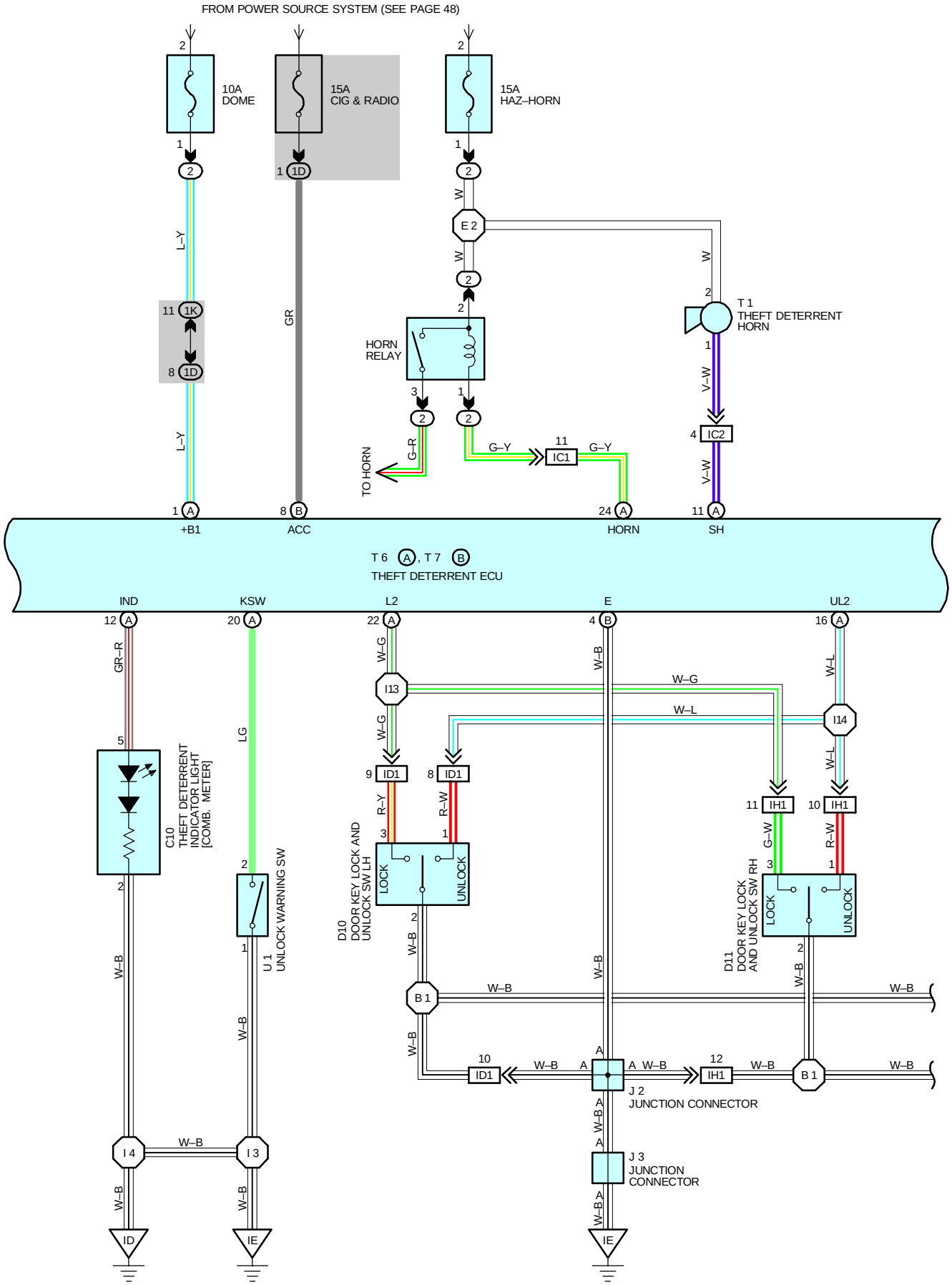
FROM POWER SOURCE SYSTEM (SEE PAGE 48)
10A
DOME
15A
CIG & RADIO
15A
HAZ–HORN
HORN
RELAY
TO HORN
T 1
THEFT DETERRENT
HORN
+B1
ACC
HORN
SH
T 6 A, T 7 B
THEFT DETERRENT ECU
IND
KSW
L2
E
UL2
C10
THEFT DETERRENT
INDICATOR LIGHT
[COMB. METER]
U 1
UNLOCK WARNING SW
D10
DOOR KEY LOCK AND
UNLOCK SW LH
D11
DOOR KEY LOCK
AND UNLOCK SW RH
LOCK
UNLOCK
J 2
JUNCTION CONNECTOR
J 3
JUNCTION
CONNECTOR
ID
IE
IE

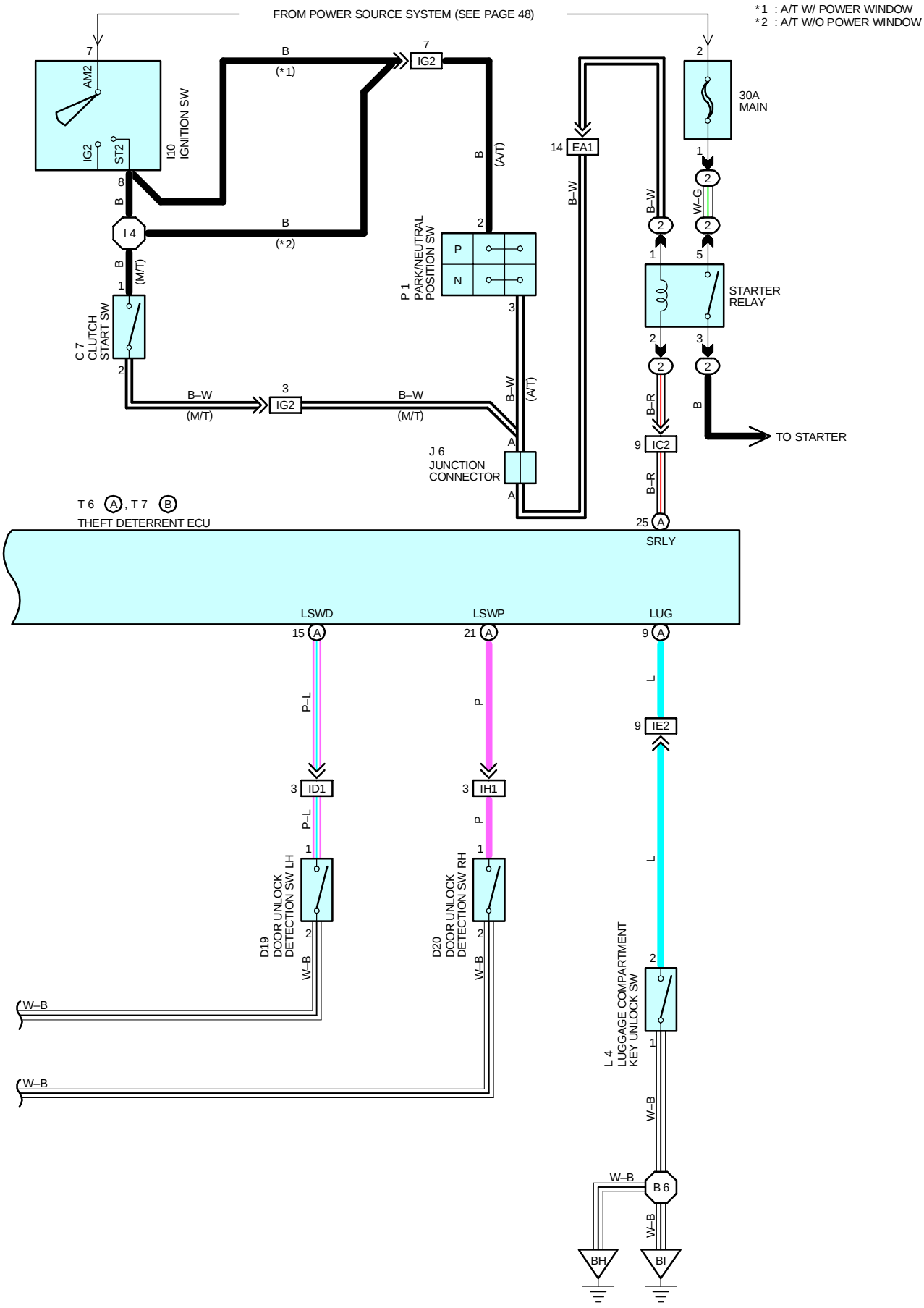
FROM POWER SOURCE SYSTEM (SEE PAGE 48)
*1 : A/T W/ POWER WINDOW
*2 : A/T W/O POWER WINDOW
I10 IGNITION SW
AM2
IG2
ST2
I 4
C 7 CLUTCH START SW
P 1 PARK/NEUTRAL POSITION SW
P
N
J 6 JUNCTION CONNECTOR
30A MAIN
STARTER RELAY
TO STARTER
EA1
IG2
IC2
T 6 A, T 7 B
THEFT DETERRENT ECU
SRLY
LSWD
LSWP
LUG
ID1
IH1
IE2
D19 DOOR UNLOCK DETECTION SW LH
D20 DOOR UNLOCK DETECTION SW RH
L 4 LUGGAGE COMPARTMENT KEY UNLOCK SW
B 6
BH
BI
W–B
B–W
B–R
P–L
W–G
B
P
L
(M/T)
(A/T)

SERVICE HINTS

D10, D11 FRONT DOOR KEY LOCK AND UNLOCK SW LH, RH

1–2 : CLOSED WITH THE DOOR KEY CYLINDER UNLOCK WITH THE KEY
3–2 : CLOSED WITH THE DOOR KEY CYLINDER LOCKED WITH THE KEY

E 3 ENGINE HOOD COURTESY SW

1–3 : CLOSED WITH THE ENGINE HOOD OPEN

U 1 UNLOCK WARNING SW

2–1 : CLOSED WITH THE KEY IN THE IGNITION KEY CYLINDER

L 4 LUGGAGE COMPARTMENT KEY UNLOCK SW

2–1 : CLOSED WITH THE LUGGAGE COMPARTMENT KEY CYLINDER UNLOCK WITH THE KEY

L 3 LUGGAGE COMPARTMENT COURTESY SW

1–GROUND : CLOSED WITH THE LUGGAGE COMPARTMENT DOOR OPEN

T 6(A), T 7(B) THEFT DETERRENT ECU

(A)25–GROUND : CONTINUITY WITH THE SHIFT LEVER IN N OR P POSITION AND THE IGNITION SW AT ST POSITION (A/T)
CONTINUITY WITH THE CLUTCH PEDAL DEPRESSED AND THE IGNITION SW AT ST POSITION (M/T)
(A)20–GROUND : CONTINUITY WITH THE KEY IN THE IGNITION KEY CYLINDER
(A)21–GROUND : CONTINUITY THE RH DOOR TO **UNLOCK** POSITION
(A)15–GROUND : CONTINUITY THE LH DOOR TO **UNLOCK** POSITION
(A)19–GROUND : CONTINUITY WITH THE RH DOOR OPEN
(A) 7–GROUND : CONTINUITY WITH THE LH DOOR OPEN
(A)22–GROUND : CONTINUITY WITH THE DOOR KEY LOCK AND UNLOCK SW LH, RH TO **LOCK** POSITION
(B) 4–GROUND : ALWAYS CONTINUITY
(A)16–GROUND : CONTINUITY WITH THE DOOR KEY LOCK AND UNLOCK SW LH, RH TO **UNLOCK** POSITION
(A) 1–GROUND : ALWAYS APPROX. 12 VOLTS
(A) 9–GROUND : CONTINUITY WITH THE LUGGAGE COMPARTMENT KEY UNLOCK SW TO **UNLOCK** POSITION
(A) 3–GROUND : CONTINUITY WITH THE RH DOOR OPEN
(A)14–GROUND : CONTINUITY WITH ENGINE HOOD OPEN
(A) 4–GROUND : CONTINUITY WITH THE LUGGAGE COMPARTMENT DOOR OPEN
(B) 8–GROUND : APPROX. 12 VOLTS WITH THE IGNITION SW AT **ACC** OR **ON** POSITION

: PARTS LOCATION

CODE	SEE PAGE	CODE	SEE PAGE	CODE	SEE PAGE
C 7	26	D20	28(C/P)	L 3	28(C/P)
C10	26	E 3	24	L 4	28(C/P)
D 7	28(C/P)	F 4 A	24	P 1	25
D 8	28(C/P)	F 5 B	24	T 1	25
D 9	28(C/P)	I10	27	T 6 A	27
D10	28(C/P)	J 2	27	T 7 B	27
D11	28(C/P)	J 3	27	U 1	27
D19	28(C/P)	J 6	27		

: RELAY BLOCKS

CODE	SEE PAGE	RELAY BLOCKS (RELAY BLOCK LOCATION)
2	22	ENGINE ROOM R/B (ENGINE COMPARTMENT LEFT)

: JUNCTION BLOCK AND WIRE HARNESS CONNECTOR

CODE	SEE PAGE	JUNCTION BLOCK AND WIRE HARNESS (CONNECTOR LOCATION)
1C	20	INSTRUMENT PANEL WIRE AND DRIVER SIDE J/B (LEFT KICK PANEL)
1D		
1E		
1J	20	ENGINE ROOM MAIN AND DRIVER SIDE J/B (LEFT KICK PANEL)
1K		
1L	20	FLOOR WIRE AND DRIVER SIDE J/B (LEFT KICK PANEL)

: CONNECTOR JOINING WIRE HARNESS AND WIRE HARNESS

CODE	SEE PAGE	JOINING WIRE HARNESS AND WIRE HARNESS (CONNECTOR LOCATION)
EA1	30	ENGINE WIRE AND ENGINE ROOM MAIN WIRE (INSIDE OF THE ENGINE ROOM R/B)
EA2		
IC1	32	INSTRUMENT PANEL WIRE AND ENGINE ROOM MAIN WIRE (LEFT KICK PANEL)
IC2		
ID1	32	FRONT DOOR LH WIRE AND INSTRUMENT PANEL WIRE (LEFT KICK PANEL)
IE2	32	INSTRUMENT PANEL WIRE AND FLOOR WIRE (LEFT KICK PANEL)
IG2	34	ENGINE WIRE AND INSTRUMENT PANEL WIRE (NEAR THE BLOWER UNIT)
IH1	34	FRONT DOOR RH WIRE AND INSTRUMENT PANEL WIRE (RIGHT KICK PANEL)

: GROUND POINTS

CODE	SEE PAGE	GROUND POINTS LOCATION
EB	30	FRONT SIDE OF THE LEFT FENDER
ID	32	LEFT KICK PANEL
IE	32	INSTRUMENT PANEL BRACE LH
BH	36(C/P)	LEFT SIDE OF THE UPPER BACK PANEL
BI	36(C/P)	LOWER BACK PANEL CENTER

: SPLICE POINTS

CODE	SEE PAGE	WIRE HARNESS WITH SPLICE POINTS	CODE	SEE PAGE	WIRE HARNESS WITH SPLICE POINTS
E 2	30	ENGINE ROOM MAIN WIRE	I13	34	INSTRUMENT PANEL WIRE
I 1	34	FLOOR WIRE	I14		
I 3	34	INSTRUMENT PANEL WIRE	B 1	36(C/P)	FRONT DOOR LH WIRE
I 4			B 3	36(C/P)	FLOOR WIRE
I 5			B 6		

C 7

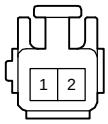

C10 GRAY

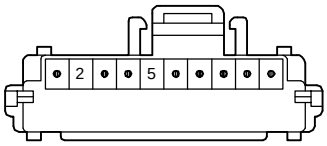

D 7 BLACK



D 8



D 9



D10 BLUE

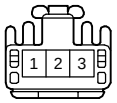

D11 BLUE

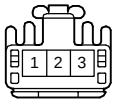

D19

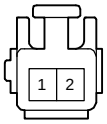

D20

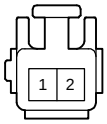

E 3 BLACK



F 4 (A), F 5 (B)

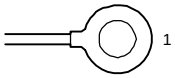

I10

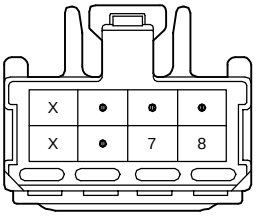

J 2 GRAY

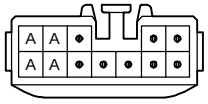

(HINT : SEE PAGE 7)

J 3 BLUE

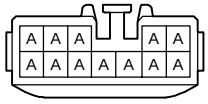

(HINT : SEE PAGE 7)

J 6 GRAY

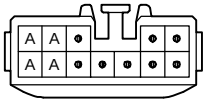

(HINT : SEE PAGE 7)

L 3 GRAY



L 4

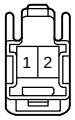

P 1 GRAY

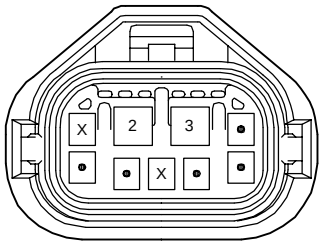

T 1 BLACK

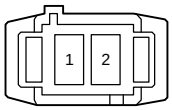

T 6 (A) ORANGE

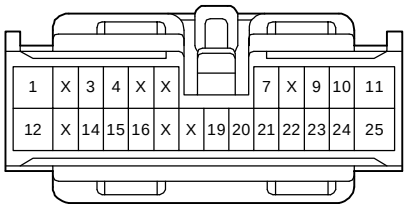

T 7 (B) ORANGE

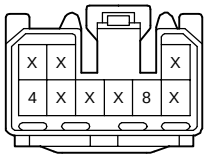

U 1 BLACK

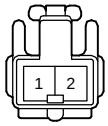

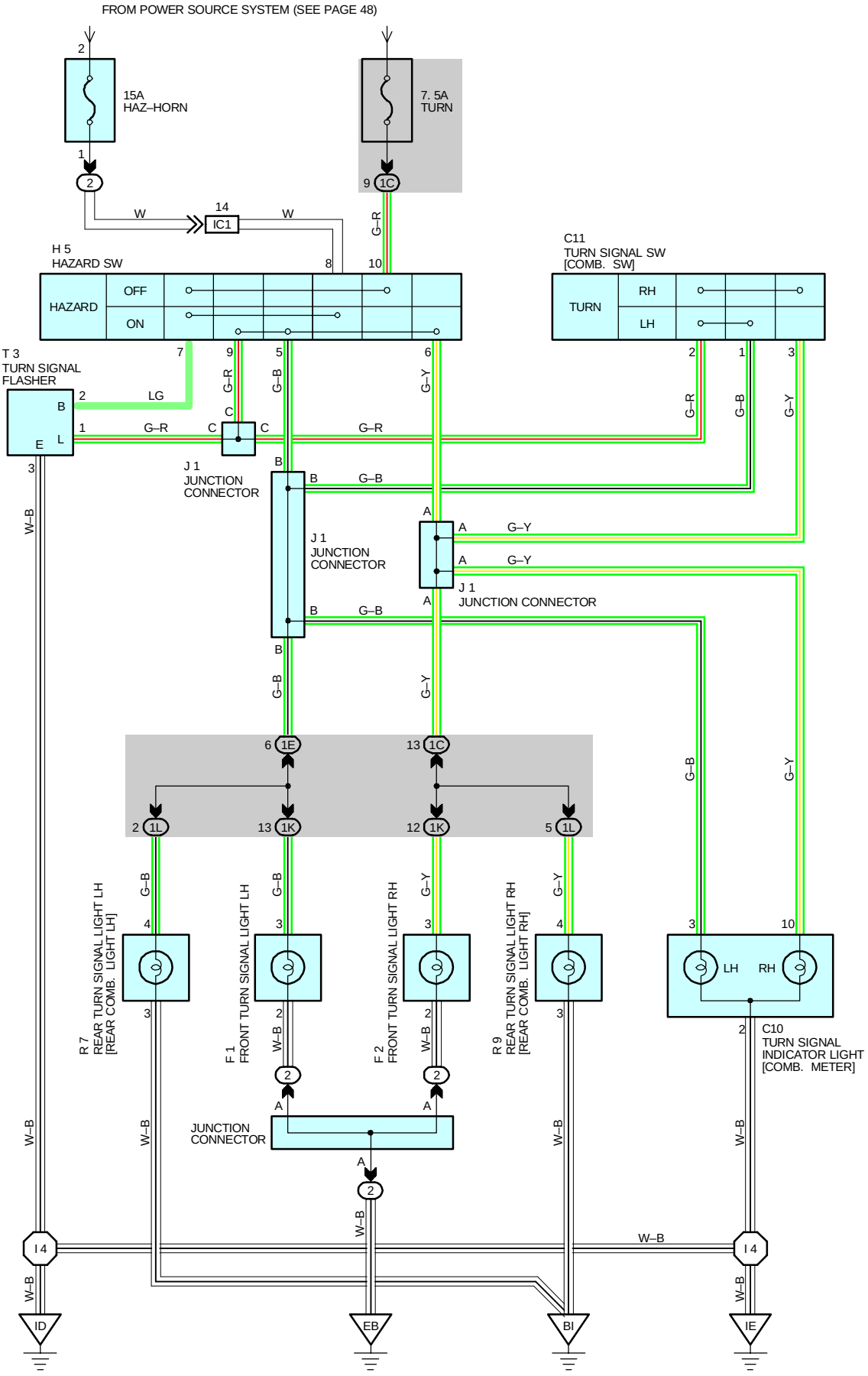
FROM POWER SOURCE SYSTEM (SEE PAGE 48)
15A
HAZ–HORN
7. 5A
TURN
IC1
H 5
HAZARD SW
HAZARD
OFF
ON
C11
TURN SIGNAL SW
[COMB. SW]
TURN
RH
LH
T 3
TURN SIGNAL
FLASHER
J 1
JUNCTION
CONNECTOR
J 1
JUNCTION
CONNECTOR
J 1
JUNCTION CONNECTOR
JUNCTION
CONNECTOR
R 7
REAR TURN SIGNAL LIGHT LH
[REAR COMB. LIGHT LH]
F 1
FRONT TURN SIGNAL LIGHT LH
F 2
FRONT TURN SIGNAL LIGHT RH
R 9
REAR TURN SIGNAL LIGHT RH
[REAR COMB. LIGHT RH]
LH
RH
C10
TURN SIGNAL
INDICATOR LIGHT
[COMB. METER]
I 4
I 4
ID
EB
BI
IE
W–B
G–R
G–B
G–Y
LG

SERVICE HINTS

T 3 TURN SIGNAL FLASHER

2–GROUND : APPROX. **12** VOLTS WITH THE IGNITION SW ON OR THE HAZARD SW ON
1–GROUND : CHANGES FROM **12** TO **0** VOLTS WITH THE IGNITION SW ON AND THE TURN SIGNAL SW (COMB. SW) LEFT OR RIGHT,OR WITH THE HAZARD SW ON
3–GROUND : ALWAYS CONTINUITY

: PARTS LOCATION

CODE	SEE PAGE	CODE	SEE PAGE	CODE	SEE PAGE
C10	26	F 2	24	R 7	28(C/P),29(CONVERTIBLE)
C11	26	H 5	26	R 9	28(C/P),29(CONVERTIBLE)
F 1	24	J 1	27	T 3	27

: RELAY BLOCKS

CODE	SEE PAGE	RELAY BLOCKS (RELAY BLOCK LOCATION)
2	22	ENGINE ROOM R/B (ENGINE COMPARTMENT LEFT)

: JUNCTION BLOCK AND WIRE HARNESS CONNECTOR

CODE	SEE PAGE	JUNCTION BLOCK AND WIRE HARNESS (CONNECTOR LOCATION)
1C 1E	20	INSTRUMENT PANEL WIRE AND DRIVER SIDE J/B (LEFT KICK PANEL)
1K	20	ENGINE ROOM MAIN WIRE AND DRIVER SIDE J/B (LEFT KICK PANEL)
1L	20	FLOOR WIRE AND DRIVER SIDE J/B (LEFT KICK PANEL)

: CONNECTOR JOINING WIRE HARNESS AND WIRE HARNESS

CODE	SEE PAGE	JOINING WIRE HARNESS AND WIRE HARNESS (CONNECTOR LOCATION)
IC1	32	INSTRUMENT PANEL WIRE AND ENGINE ROOM MAIN WIRE (LEFT KICK PANEL)

: GROUND POINTS

CODE	SEE PAGE	GROUND POINTS LOCATION
EB	30	FRONT SIDE OF THE LEFT FENDER
ID	32	LEFT KICK PANEL
IE	32	INSTRUMENT PANEL BRACE LH
BI	36(C/P) 37(CONVERTIBLE)	LOWER BACK PANEL CENTER

: SPLICE POINTS

CODE	SEE PAGE	WIRE HARNESS WITH SPLICE POINTS	CODE	SEE PAGE	WIRE HARNESS WITH SPLICE POINTS
I 4	34	INSTRUMENT PANEL WIRE			

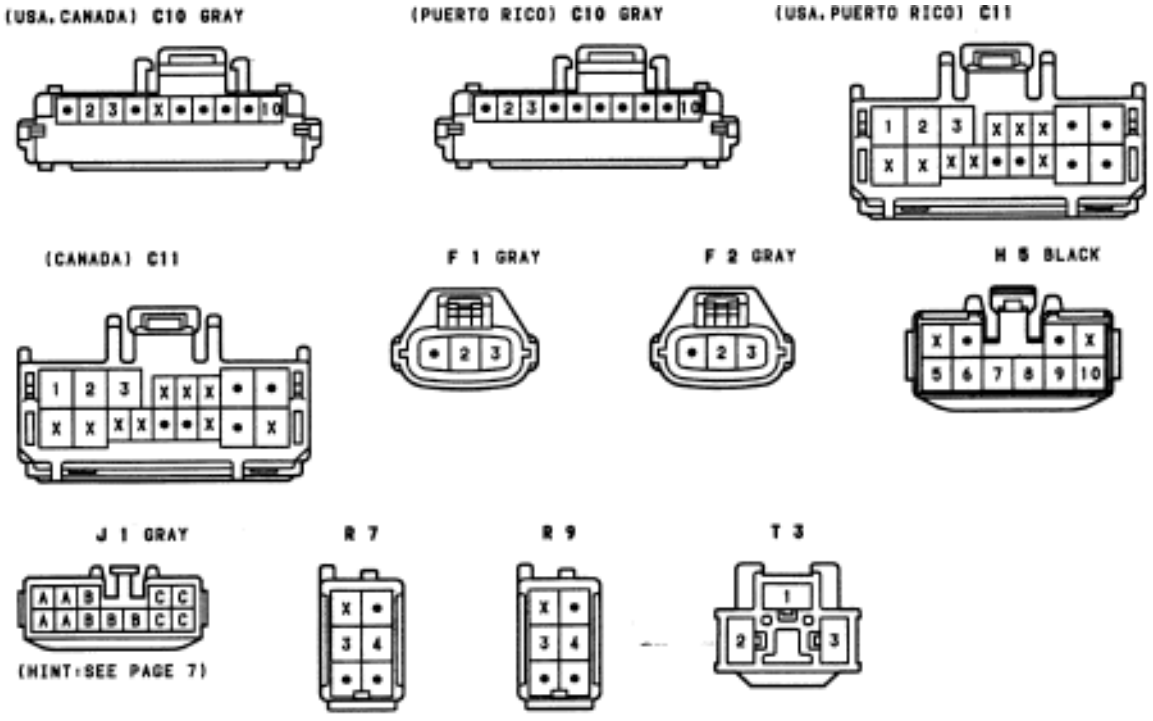

SYSTEM OUTLINE

WITH THE IGNITION SW TURNED ON, THE CURRENT FLOWS TO **TERMINAL 17** OF THE WIPER AND WASHER SW, **TERMINAL 2** OF THE WASHER MOTOR AND **TERMINAL 6** OF THE FRONT WIPER MOTOR THROUGH THE **WIPER** FUSE.

8. LOW SPEED POSITION

WITH THE WIPER AND WASHER SW TURNED TO LO POSITION, THE CURRENT FLOWS FROM **TERMINAL 17** OF THE WIPER AND WASHER SW ➔ **TERMINAL 7** ➔ **TERMINAL 5** OF THE FRONT WIPER MOTOR ➔ **TERMINAL 4** ➔ **GROUND**, CAUSING THE FRONT WIPER MOTOR TO RUN AT LOW SPEED.

9. HIGH SPEED POSITION

WITH THE WIPER AND WASHER SW TURNED TO HI POSITION, THE CURRENT FLOWS FROM **TERMINAL 17** OF THE WIPER AND WASHER SW ➔ **TERMINAL 8** ➔ **TERMINAL 3** OF THE FRONT WIPER MOTOR ➔ **TERMINAL 4** ➔ **GROUND**, CAUSING THE FRONT WIPER MOTOR TO RUN AT HIGH SPEED.

10. INT POSITION

WITH THE WIPER AND WASHER SW TURNED TO INT POSITION, THE WIPER RELAY OPERATES AND THE CURRENT FLOWS FROM **TERMINAL 17** OF THE WIPER AND WASHER SW ➔ **TERMINAL 2** ➔ **GROUND**. THIS ACTIVATES THE INTERMITTENT CIRCUIT AND THE CURRENT FLOWS FROM **TERMINAL 17** OF THE WIPER AND WASHER SW TO **TERMINAL 7** ➔ **TERMINAL 5** OF THE FRONT WIPER MOTOR ➔ **TERMINAL 4** ➔ **GROUND** AND THE WIPER OPERATES. INTERMITTENT OPERATION IS CONTROLLED BY A CONDENSER CHARGE AND DISCHARGE FUNCTION IN THE RELAY.

11. WASHER CONTINUOUS OPERATION

WITH THE WIPER AND WASHER SW PULLED TO **WASHER** POSITION, THE CURRENT FLOWS FROM THE **WIPER** FUSE TO **TERMINAL 2** OF THE WASHER MOTOR ➔ **TERMINAL 1** ➔ **TERMINAL 11** OF THE WIPER AND WASHER SW ➔ **TERMINAL 2** ➔ **GROUND** , CAUSING THE WASHER MOTOR TO RUN AND THE WINDOW WASHER TO SPRAY. SIMULTANEOUSLY, THE CURRENT FLOWS FROM THE **WIPER** FUSE TO **TERMINAL 17** OF THE WIPER AND WASHER SW ➔ **TERMINAL 7** ➔ **TERMINAL 5** OF THE WIPER MOTOR ➔ **TERMINAL 4** ➔ **GROUND**, CAUSING THE WIPER TO FUNCTION.

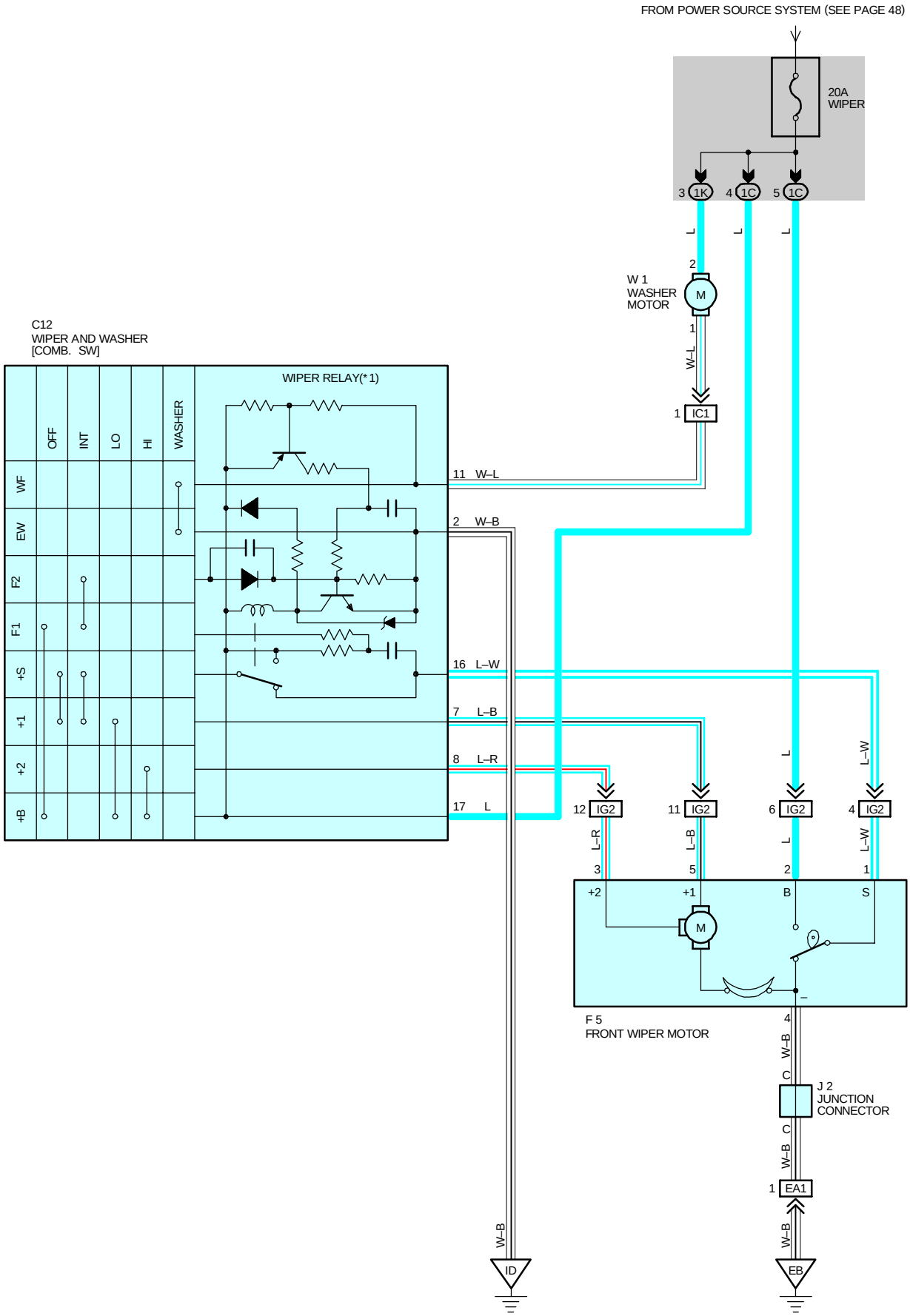
FROM POWER SOURCE SYSTEM (SEE PAGE 48)
20A
WIPER
3 1K
4 1C
5 1C
L
L
L
2
W 1
WASHER
MOTOR
M
1
W–L
1 IC1
C12
WIPER AND WASHER
[COMB. SW]
WIPER RELAY(*1)
OFF
INT
LO
HI
WASHER
WF
EW
F2
F1
+S
+1
+2
+B
11 W–L
2 W–B
16 L–W
7 L–B
8 L–R
17 L
12 IG2
11 IG2
6 IG2
4 IG2
L–R
L–B
L
L–W
3
5
2
1
+2
+1
B
S
M
F 5
FRONT WIPER MOTOR
4
W–B
C
J 2
JUNCTION
CONNECTOR
C
W–B
1 EA1
W–B
W–B
ID
EB

SERVICE HINTS

C12 WIPER AND WASHER SW [COMB. SW]

2–GROUND : ALWAYS CONTINUITY
17–GROUND : APPROX. 12 VOLTS WITH THE IGNITION SW AT ON POSITION
7–GROUND : APPROX. 12 VOLTS WITH THE WIPER AND WASHER SW [COMB.SW] AT LO POSITION
APPROX. 12 VOLTS EVERY APPROX. 1 TO 10 SECONDS INTERMITTENTLY WITH THE WIPER AND WASHER SW [COMB.SW] AT INT POSITION
16–GROUND : APPROX. 12 VOLTS WITH THE IGNITION SW ON AND UNLESS THE FRONT WIPER MOTOR AT STOP POSITION
8–GROUND : APPROX. 12 VOLTS WITH THE IGNITION SW ON AND THE WIPER AND WASHER SW [COMB. SW] AT HI POSITION

F3 FRONT WIPER MOTOR

1–2:CLOSED UNLESS THE FRONT WIPER MOTOR AT STOP POSITION

: PARTS LOCATION

CODE	SEE PAGE	CODE	SEE PAGE	CODE	SEE PAGE
C12	26	J 5	27		
F 3	24	W 1	25		

: JUNCTION BLOCK AND WIRE HARNESS CONNECTOR

CODE	SEE PAGE	JUNCTION BLOCK AND WIRE HARNESS (CONNECTOR LOCATION)
1C	20	INSTRUMENT PANEL WIRE AND DRIVER SIDE J/B (LEFT KICK PANEL)
1K	20	ENGINE ROOM MAIN WIRE AND DRIVER SIDE J/B (LEFT KICK PANEL)

: CONNECTOR JOINING WIRE HARNESS AND WIRE HARNESS

CODE	SEE PAGE	JOINING WIRE HARNESS AND WIRE HARNESS (CONNECTOR LOCATION)
EA1	30	ENGINE WIRE AND ENGINE ROOM MAIN WIRE (INSIDE OF THE ENGINE ROOM R/B)
IC1	32	INSTRUMENT PANEL WIRE AND ENGINE ROOM MAIN WIRE (LEFT KICK PANEL)
IG2	34	ENGINE WIRE AND INSTRUMENT PANEL WIRE (NEAR THE BLOWER UNIT)

: GROUND POINTS

CODE	SEE PAGE	GROUND POINTS LOCATION
EB	30	FRONT SIDE OF THE LEFT FENDER
ID	32	LEFT KICK PANEL

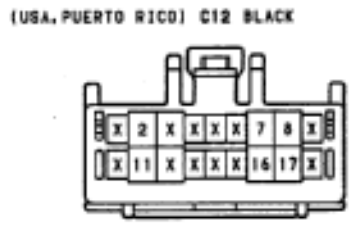









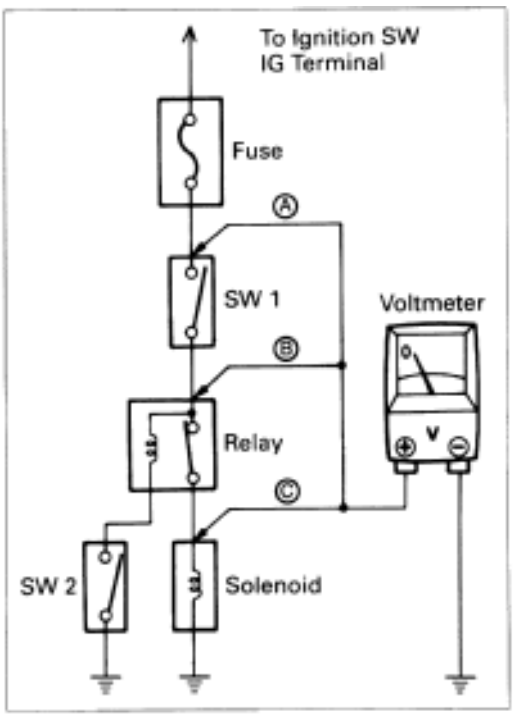

VOLTAGE CHECK

(a) Establish conditions in which voltage is check point.

Example:

Ⓐ– Ignition SW on
Ⓑ– Ignition SW and SW 1 on
Ⓒ– Ignition SW, SW 1 and Relay on (SW2 off)

(b) Using a voltmeter, connect the negative lead to a ground point or negative battery terminal, and a positive lead to the connector or component terminal. This check can be done with a test light instead of a voltmeter.

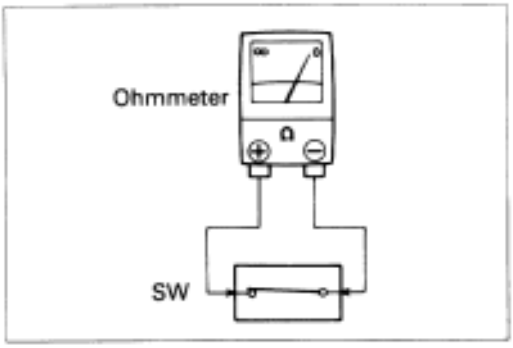

CONTINUITY AND RESISTANCE CHECK

(a) Disconnect the battery terminal or wire so there is no voltage between the check points.

(b) Contact the two leads of an ohmmeter to each of the check point.

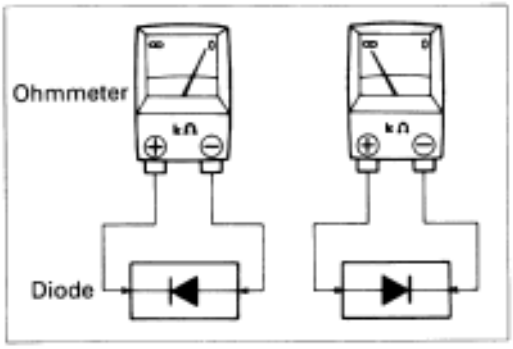

If the circuit has diodes, reverse the two leads and check again.
When contacting the negative lead to the diode positive side and the positive lead to the negative side, there should be continuity.
When contacting the two leads in reverse, there should be no continuity.

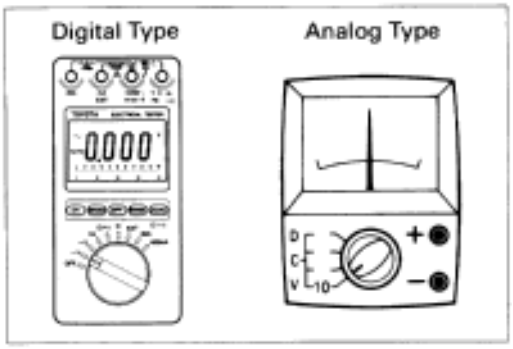

(c) Use the volt/ohmmeter with high impedance (10kΩ/V minimum) for troubleshooting of the electrical circuit.

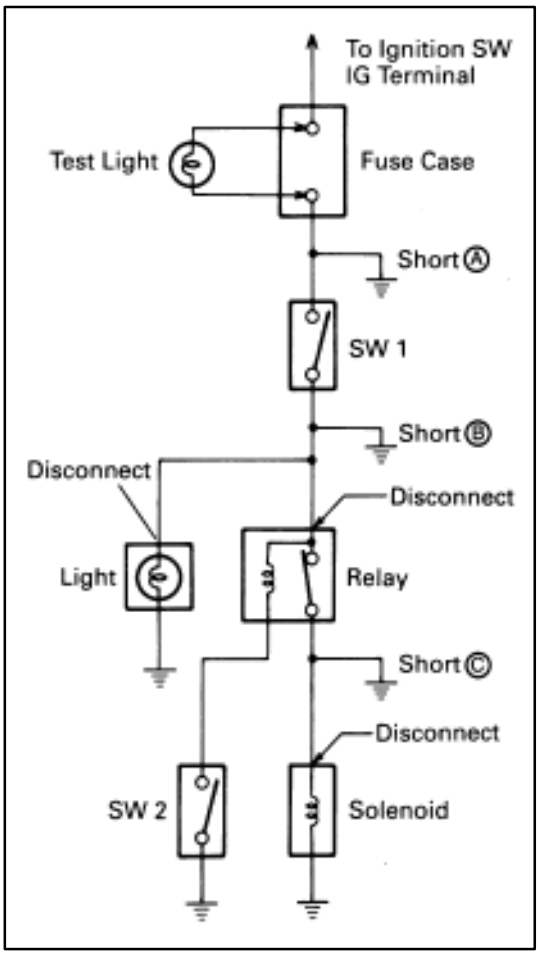

FINDING A SHORT CIRCUIT

(a) Remove the blown fuse and disconnect all loads of the fuse.
(b) Connect a test light in place of the fuse.
(c) Establish conditions in which the test light comes on.

Example:

Ⓐ – Ignition SW on
Ⓑ – Ignition SW and SW 1 on
Ⓒ – Ignition SW, SW 1 and Relay on (Connect the Relay) and SW 2 off (or Disconnect SW 2)

(d) Disconnect and reconnect the connectors while watching the test light.
The short lies between the connector where the test light stays lit and the connector where the light goes out.

(e) Find the exact location of the short by lightly shaking the problem wire along the body.

CAUTION:

(a) Do not open the cover or the case of the ECU unless absolutely necessary. (If the IC terminals are touched, the IC may be destroyed by static electricity.)
(b) When replacing the internal mechanism (ECU part) of the digital meter, be careful that no part of your body or clothing comes in contact with the terminals of leads from the IC, etc. of the replacement part (spare part).

DISCONNECTION OF MALE AND FEMALE CONNECTORS

To pull apart the connectors, pull on the connector itself, not the wire harness.

HINT: Check to see what kind of connector you are disconnecting before pulling apart.

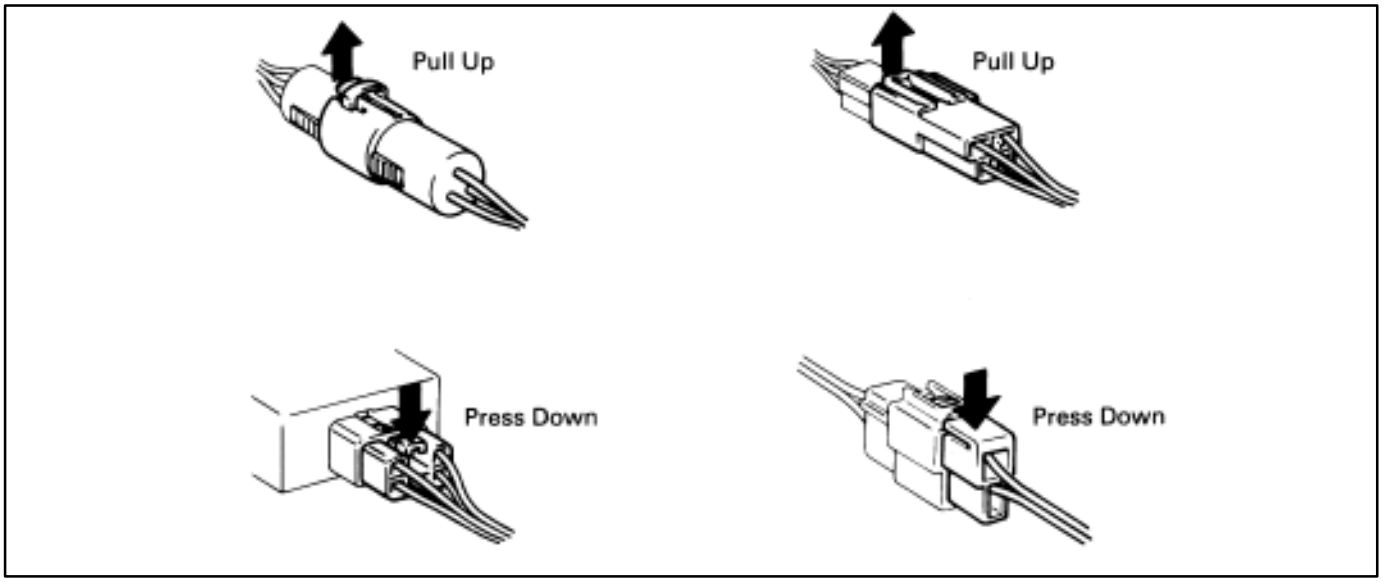

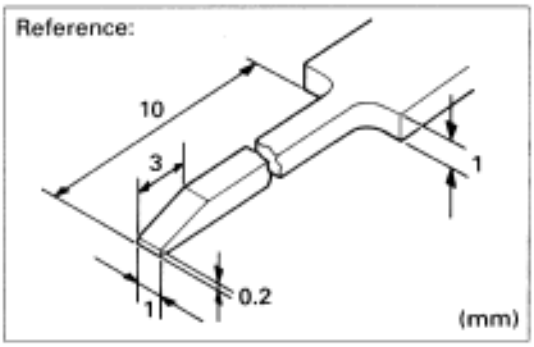

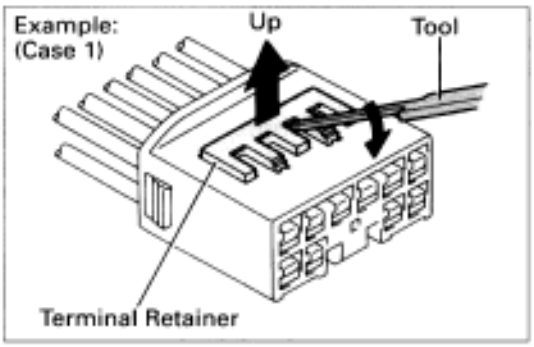

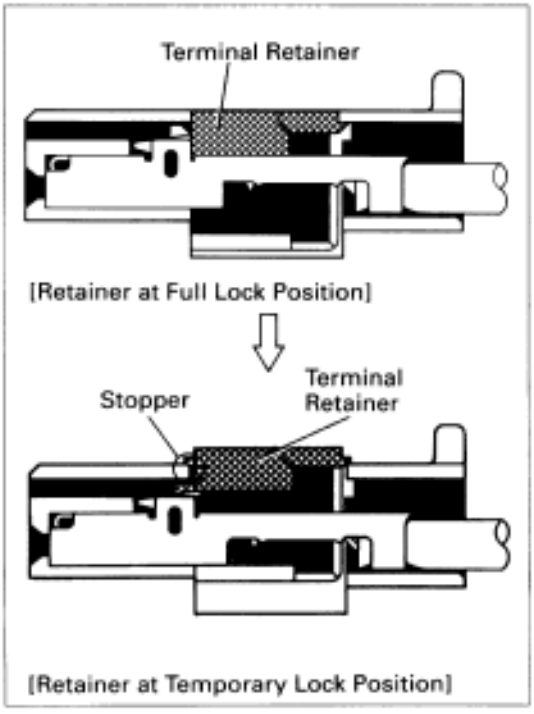

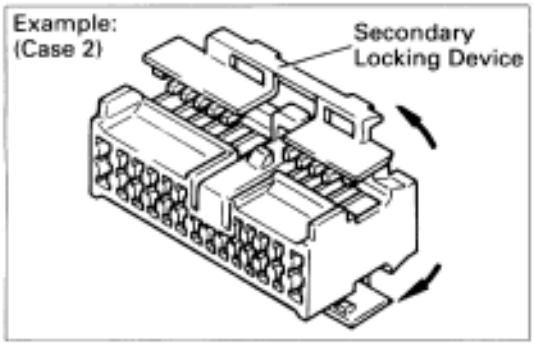

HOW TO REPLACE TERMINAL (with terminal retainer or secondary locking device)

1. PREPARE THE SPECIAL TOOL
   HINT: To remove the terminal from the connector, please construct and use the special tool or like object shown on the left.

2. DISCONNECT CONNECTOR

3. DISENGAGE THE SECONDARY LOCKING DEVICE OR TERMINAL RETAINER
   (a) Locking device must be disengaged before the terminal locking clip can be released and the terminal removed from the connector.

   (b) Use a special tool or the terminal pick to unlock the secondary locking device or terminal retainer.

NOTICE:
Do not remove the terminal retainer from connector body.

Ⓐ For Non–Waterproof Type Connector

HINT: The needle insertion position varies according to the connector's shape (number of terminals etc.), so check the position before inserting it.

"Case 1"
Raise the terminal retainer up to the temporary lock position.

"Case 2"
Open the secondary locking device.

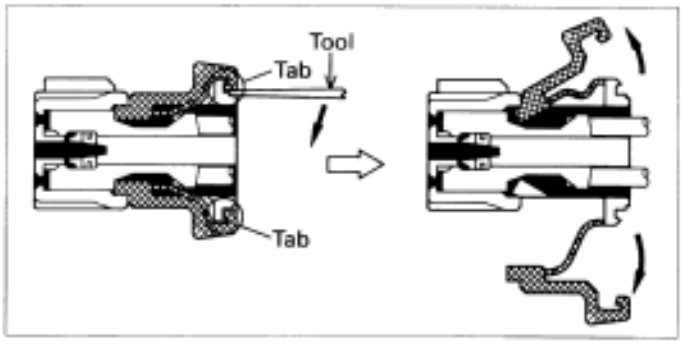

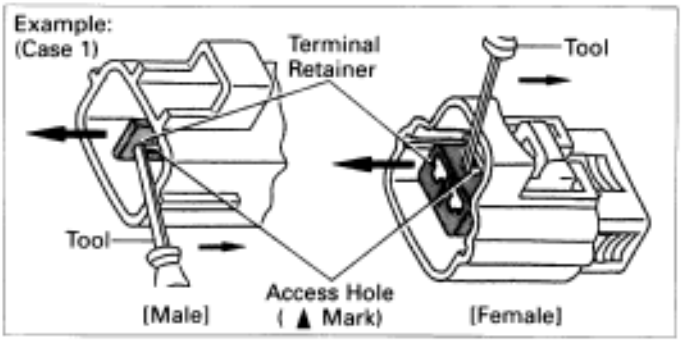

Ⓑ For Waterproof Type Connector

HINT: Terminal retainer color is different according to connector body.

Example:

Terminal Retainer	:Connector Body:
Black or White	:Gray
Black or White	:Dark Gray
Gray or White	:Black

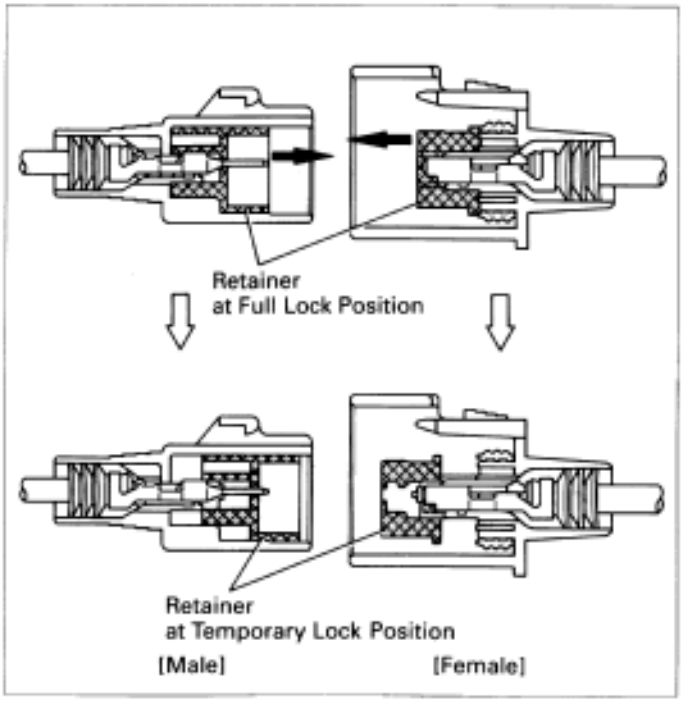

"Case 1"

Type where terminal retainer is pulled up to the temporary lock position (Pull Type).

Insert the special tool into the terminal retainer access hole (▲Mark) and pull the terminal retainer up to the temporary lock position.

HINT: The needle insertion position varies according to the connector's shape (number of terminals etc.), so check the position before inserting it.

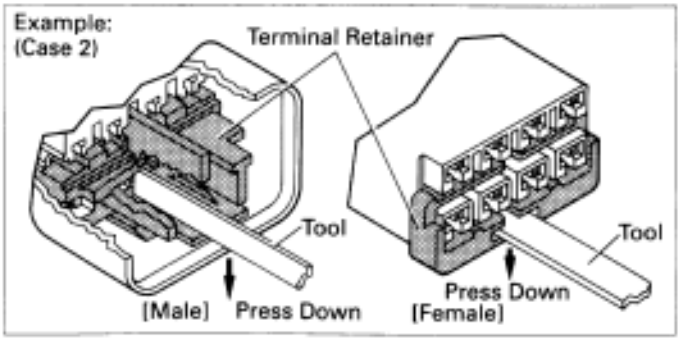

"Case 2"

Type which cannot be pulled as far as Power Lock insert the tool straight into the access hole of terminal retainer as shown.

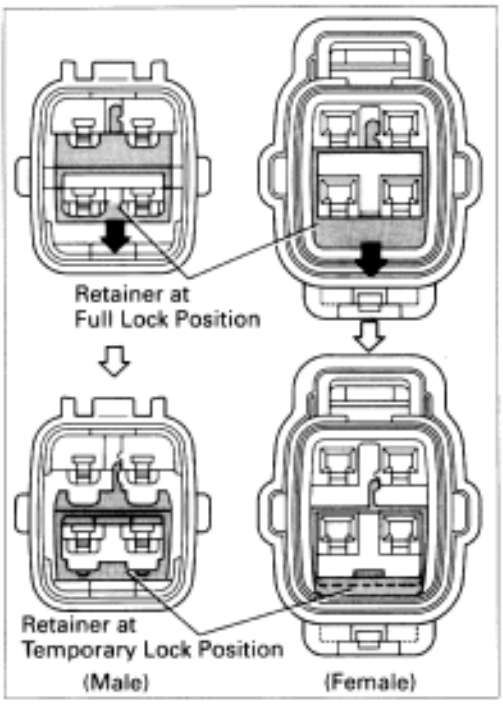

Push the terminal retainer down to the temporary lock position.

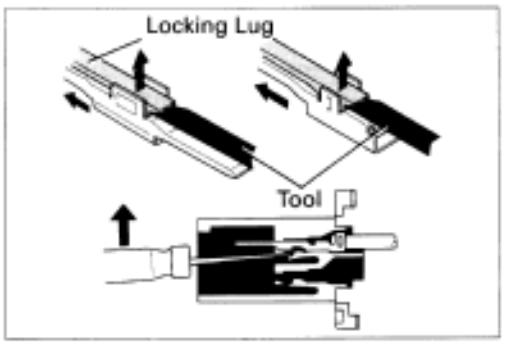

(c) Release the locking lug from terminal and pull the terminal out from rear.

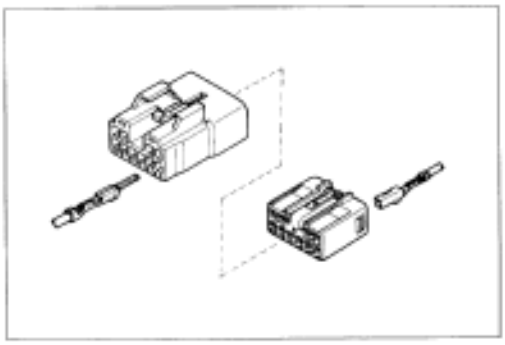

4. INSTALL TERMINAL TO CONNECTOR

(a) Insert the terminal.

HINT:

1. Make sure the terminal is positioned correctly.
2. Insert the terminal until the locking lug locks firmly.
3. Insert the terminal with terminal retainer in the temporary lock position.

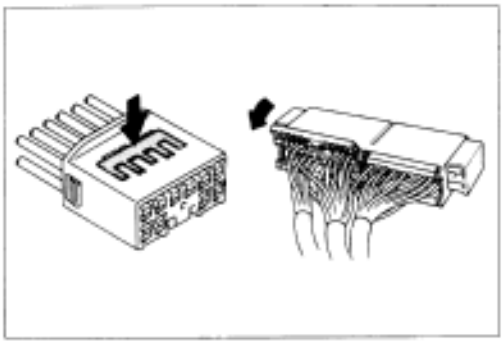

(b) Push the secondary locking device or terminal retainer into the full lock position.

5. CONNECT CONNECTOR